1 **(a)** A sketch of a toothpaste tube is shown on the right.

In the space below complete the following full size **orthographic views** of the toothpaste tube:

(i) a **front** view in the direction of **F**; [7]

(ii) an **end** view in the direction of **E**. [3]

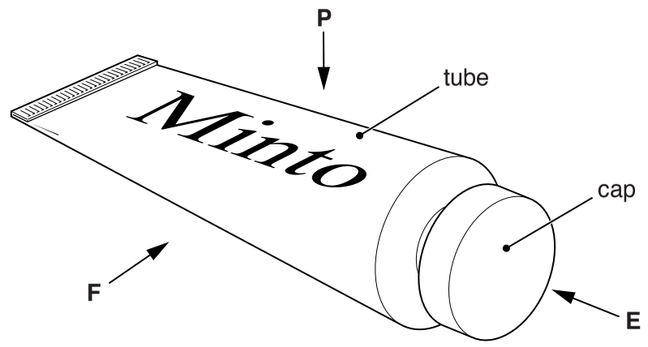

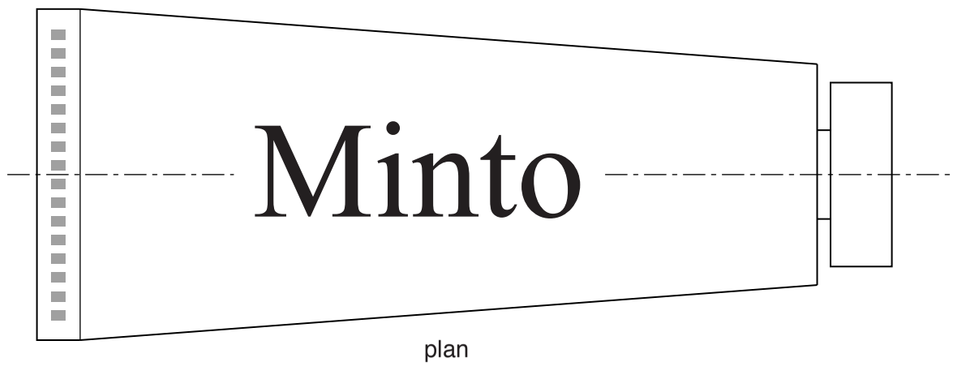

plan

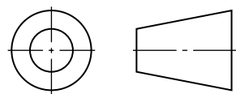

front view

(b) Write **two** specification points for the **material** the toothpaste tube is made from.

1. .....

..... [1]

2. .....

..... [1]

(c) Complete the diagram below to show the toothpaste being applied to a toothbrush. [3]

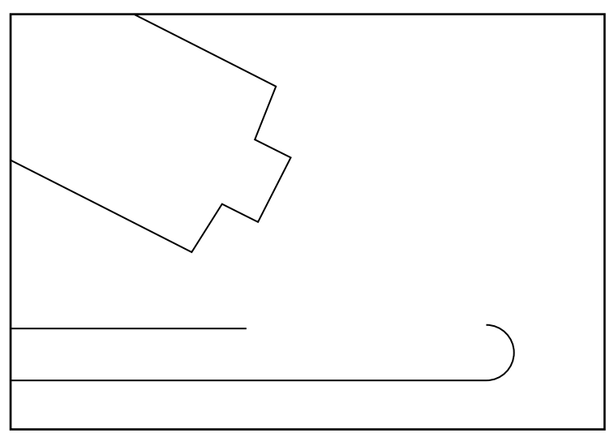

(d) Orthographic views of the cap of the toothpaste tube are shown on the right.

Draw to a scale of 2 : 1 a **planometric** view of the cap on the given centre lines. [5]

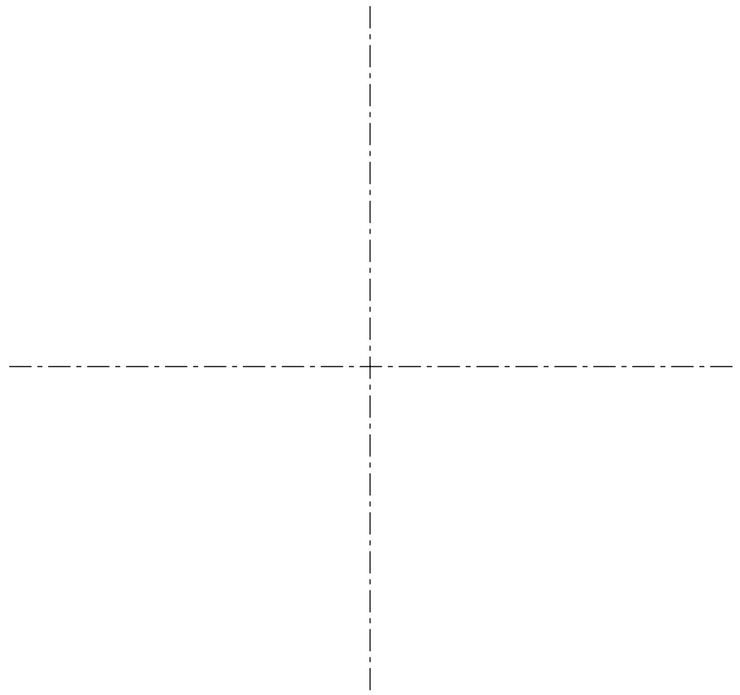

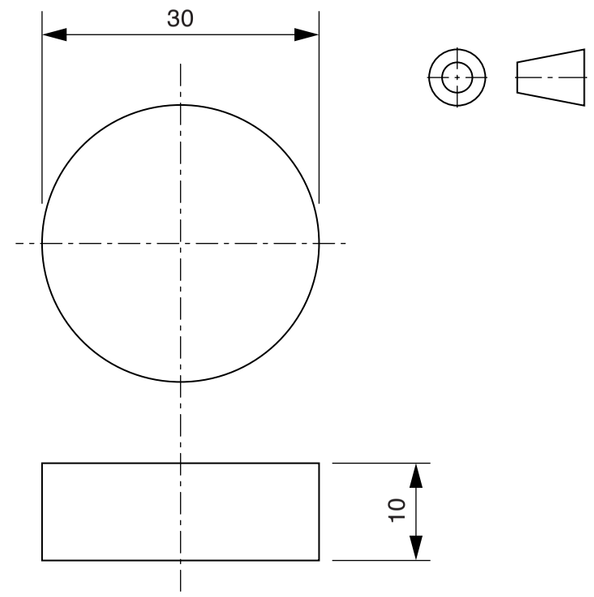

Not to scale

(e) The toothpaste tube is packaged in a card box. In the space below complete the sketch of the development (net) of the box for the toothpaste tube. Clearly show the fold in flaps, the fold lines and the glue tab. [8]

(f) Explain **one** way the manufacturer of the toothpaste could make the card packaging environmentally friendly. [2]

.....

.....

.....

.....

.....

.....

.....

.....

[Turn over

www.xtrapapers.com

2 **(a)** Orthographic views of a perfume bottle are shown on the right. From the given start point **A** draw a full size **isometric** drawing of the perfume bottle. [8]

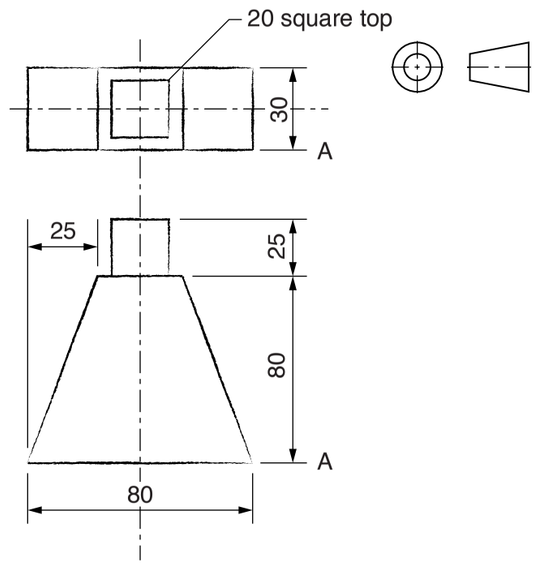

Not to scale

A

(b) A sketch of the label to be added to the perfume bottle is shown below.

On the centre lines below, draw a full size view of the outline shape of the label. [4]

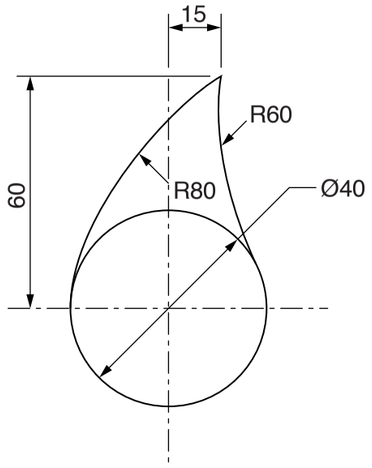

(c) Complete the list below to show **three** pieces of information that would be printed on the label for the perfume bottle.

1. *Product name*
2. ..... [1]
3. ..... [1]

(d) Tick (✓) the method below that would be used to produce 20 000 colour labels for the perfume bottle. [1]

Photocopying	
Embossing	
Digital printing	

(e) A point of sale display stand for the perfume bottle is shown on the right. The stand is made from four pieces of foam board that slot together. Complete the exploded sketch below by adding parts **b**, **c** and **d**. [8]

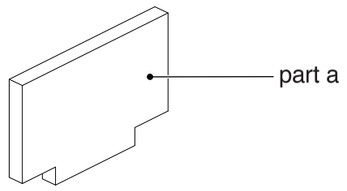

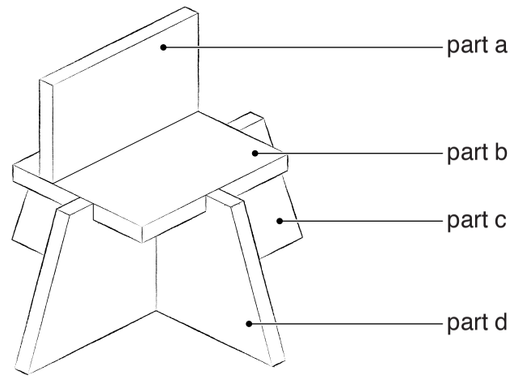

(f) Add thick and thin line technique to part **a** of the exploded sketch above. [3]

(g) Complete the list below to show the **three** pieces of equipment that are required to cut out the foam board pieces of the point of sale display stand.

1. *Cutting mat*
2. .....[1]
3. .....[1]

(h) Explain **one** thing that would need to be checked to make sure the parts of the display stand are cut out correctly before they are assembled. [2]

.....

.....

.....

.....

.....

.....

© UCLES 2015

Permission to reproduce items where third-party owned material protected by copyright is included has been sought and cleared where possible. Every reasonable effort has been made by the publisher (UCLES) to trace copyright holders, but if any items requiring clearance have unwittingly been included, the publisher will be pleased to make amends at the earliest possible opportunity.
University of Cambridge International Examinations is part of the Cambridge Assessment Group. Cambridge Assessment is the brand name of University of Cambridge Local Examinations Syndicate (UCLES), which is itself a department of the University of Cambridge.

www.xtrapapers.com