UNIVERSITY OF CAMBRIDGE INTERNATIONAL EXAMINATIONS
International General Certificate of Secondary Education

CANDIDATE NAME	

CENTRE NUMBER						CANDIDATE NUMBER				

* 6 5 5 3 5 2 6 7 7 8 *

DESIGN AND TECHNOLOGY **0445/03**

Paper 3 Resistant Materials **May/June 2008**

1 hour

Candidates answer on the Question Paper.

No Additional Materials are required.

To be taken together with Paper 1 in one session of 2 hours 15 minutes.

READ THESE INSTRUCTIONS FIRST

Write your Centre number, candidate number and name on all the work you hand in.
Write in blue or black pen.
You may use a soft pencil for any diagrams, graphs or rough working.
Do not use staples, paper clips, highlighters, glue or correction fluid.
DO **NOT** WRITE IN ANY BARCODES.

Section A
Answer **all** questions in this section.
Section B
Answer **one** question in this section.

You may use a calculator.

The total of the marks for this paper is 50.
The number of marks is given in brackets [ ] at the end of each question or part question.

For Examiner's Use	
Section A	
Section B	
Total	

This document consists of **16** printed pages.

For
miner's
e

Section A

Answer **all** questions in this section.

1

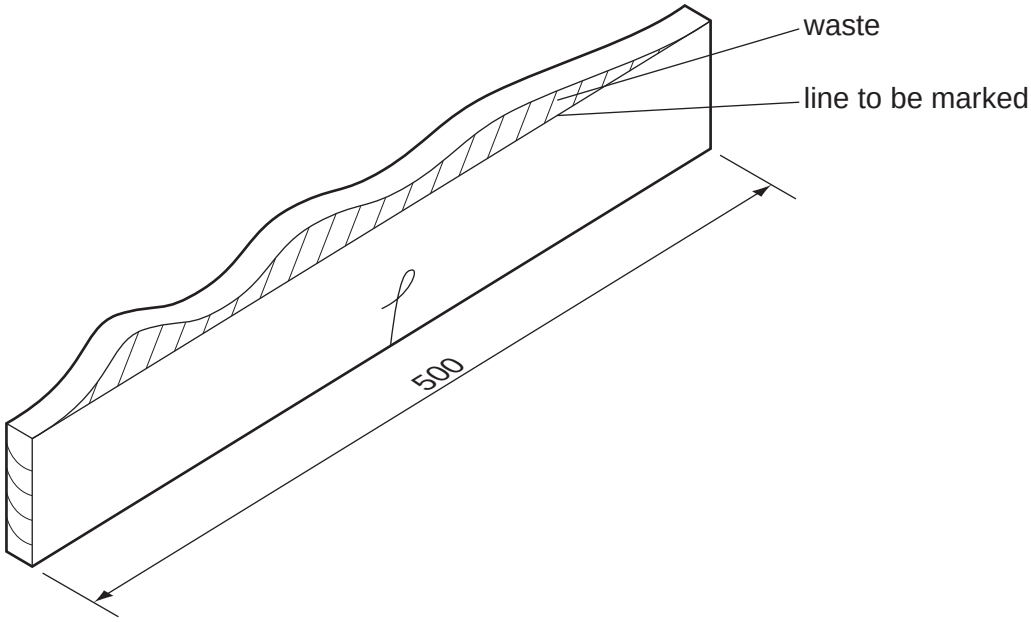

Name the correct tool you would use to carry out the following processes to the length of solid wood shown above:

(a) marking a line parallel to the edge;

..... [1]

(b) removing the waste wood;

..... [1]

(c) checking the edge for flatness.

..... [1]

2 Complete the table below by giving the appropriate item, finish or purpose.

Item	Finish	Purpose
saucepan	PTFE (Teflon®)	
	galvanised	prevents rust
copper jewellery		hard, colourful and protective

[3]

3 State how the clear acrylic rod shown in Fig. 1 could be joined permanently to the base.

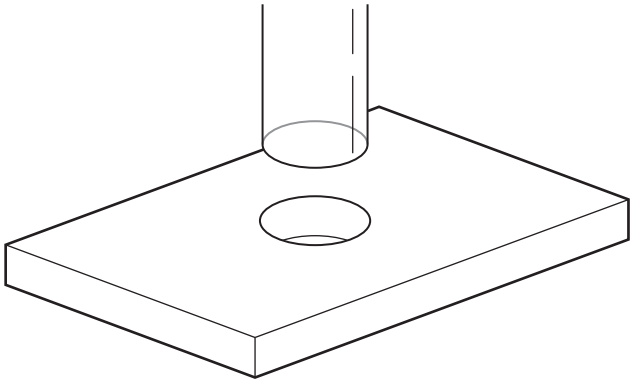

Fig. 1

..... [1]

4 Give **one** benefit of using a contact (impact) adhesive when joining a plastic laminate to a manufactured board.

..... [1]

5 Fig. 2 shows a metric micrometer and a close-up view of the sleeve and thimble.

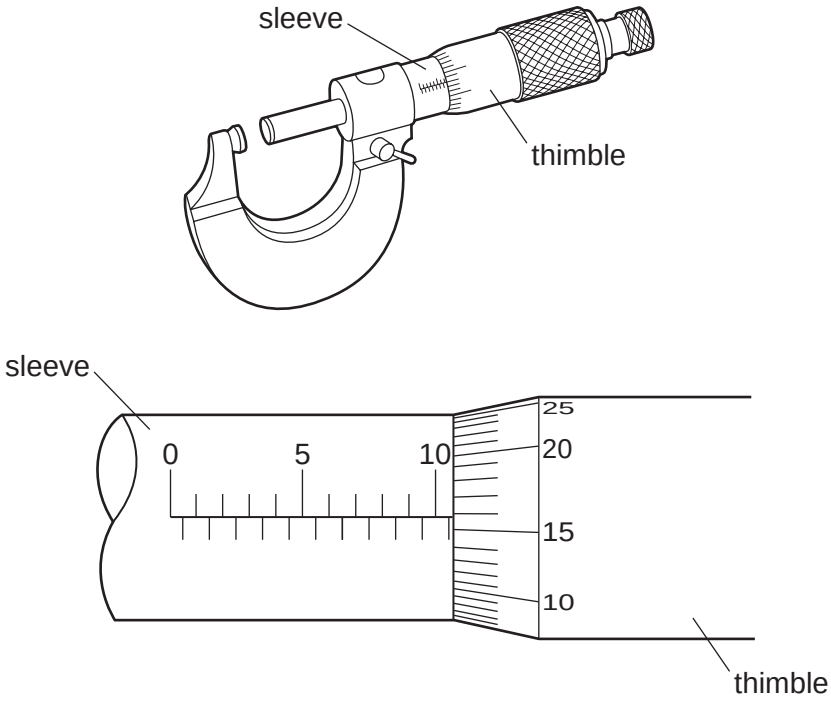

Fig. 2

State the exact reading shown to one hundredth of a mm (0.01 mm).

..... [3]

6 Complete the sketch below to show a corner bridle joint.

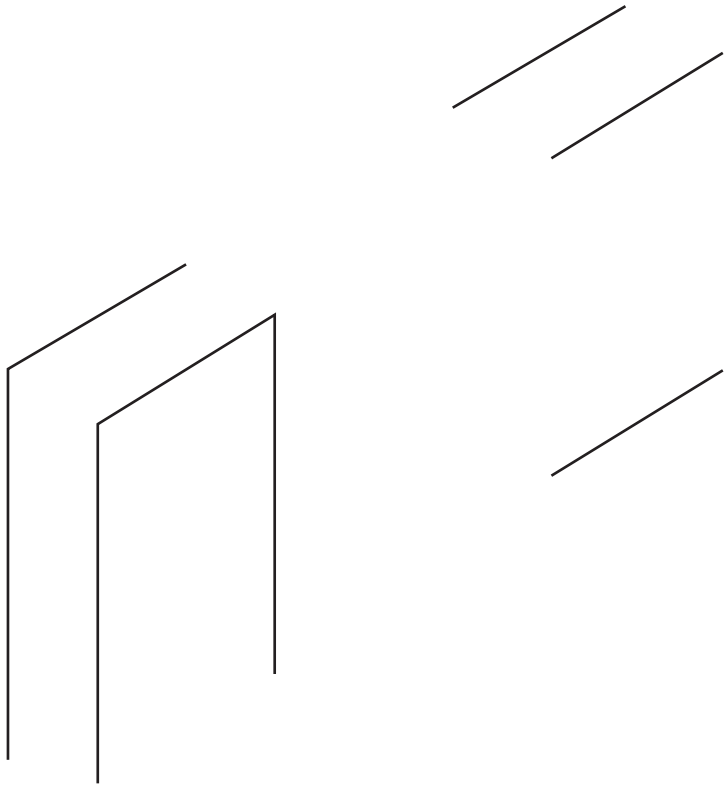

[3]

7 Fig. 3 shows two different types of nut.

wing nut hexagonal nut

Fig. 3

Give **one** advantage of using each type of nut.

Advantage of wing nut ..... [1]

Advantage of hexagonal nut ..... [1]

8 Paint can be applied by brush or spray.

(a) State **one** advantage, other than speed, of using a spray to apply paint.

..... [1]

(b) Describe **one** safety precaution you would need to take when spray painting.

..... [1]

9 Name the type of chisel used to cut into corner **A** shown below.

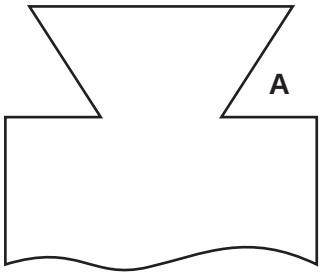

..... [1]

10 Complete the table below by naming the process by which each of the plastic products would be made and give a different material for each of the products shown.

Plastic product	Process	Material
 cap from a toothpaste tube		
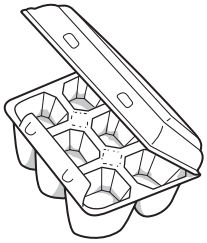 egg carton		
 lemonade bottle		

[6]

For
miner's
e

Section B

Answer **one** question from this section.

11 Fig. 4 shows an incomplete design for a Compact Disc (CD) rack made from acrylic.

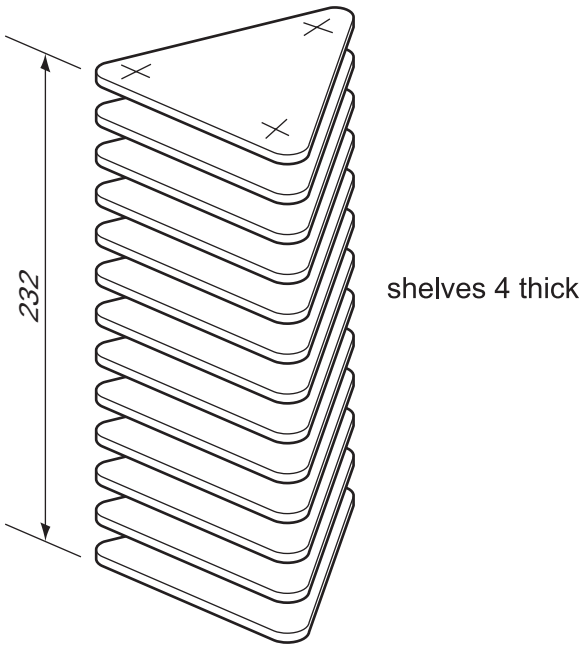

Fig. 4

(a) Give **two** advantages of using acrylic rather than wood for the CD rack shown in Fig. 4.

1 ..... [1]

2 ..... [1]

(b) Give **two** benefits of using a template when marking out the shelves for the CD rack.

1 ..... [1]

2 ..... [1]

(c) Fig. 5 shows one shelf of the CD rack.

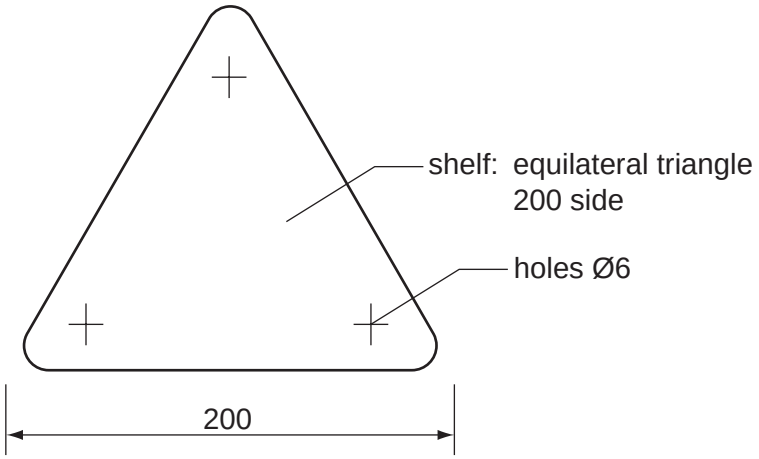

Fig. 5

(i) Use sketches and notes to design a jig that could be used when drilling the **three** holes in each of the thirteen shelves accurately.

[3]

(ii) Describe **one** safety feature of your jig in use.

.....

..... [1]

(d) Fig. 6 shows a length of acrylic from which **five** shelves will be produced.

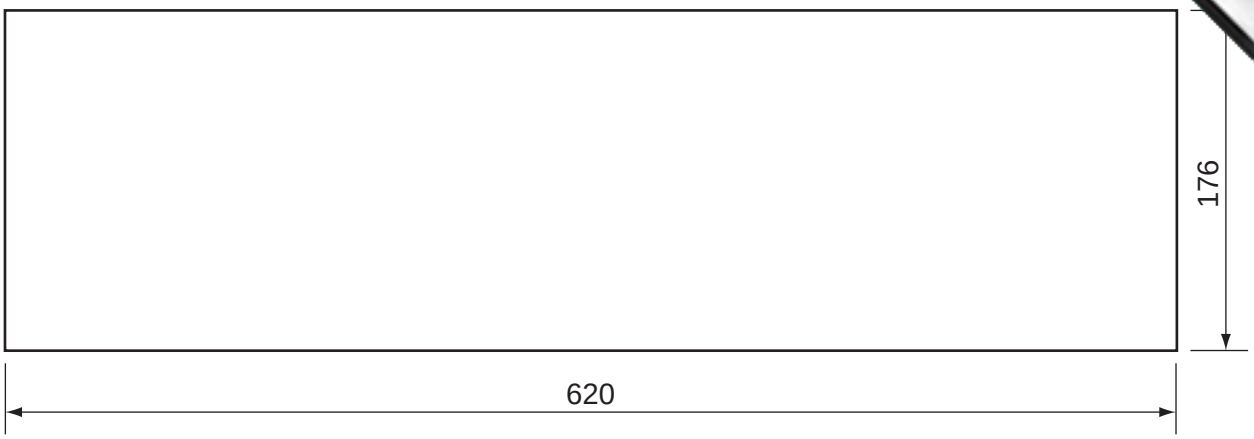

SCALE 1:4

Fig. 6

(i) Draw on Fig. 6 to show how **five** shelves could be marked out ready to be sawn.

[4]

(ii) Give **one** reason why a felt-tip pen would be used to mark out the acrylic rather than a scriber.

..... [1]

(iii) Use sketches and notes to show how **one** shelf could be sawn from the length of acrylic shown in Fig. 6.

Include the following details:

- the method of holding the acrylic securely;
- the name of the saw used.

[4]

(iv) Describe **four** stages used to finish the edges of the acrylic shelves after the
been sawn to shape.

1 .....

.....

2 .....

.....

3 .....

.....

4 .....

..... [4]

(e) Fig. 7 shows the top three shelves located on Ø6 rods.

Use sketches and notes to show how each shelf could be spaced to enable CDs to be stored.

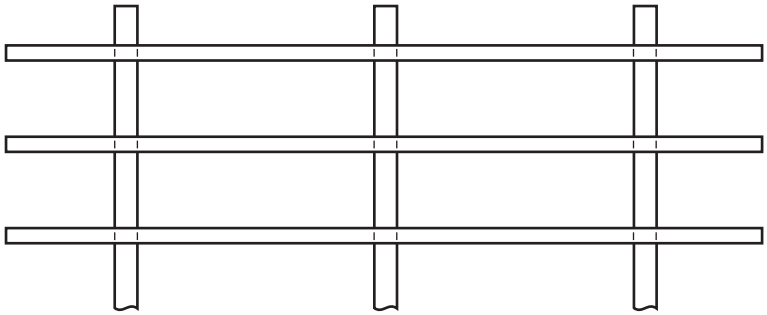

Fig. 7

[4]

12 Fig. 8 shows a wind speed indicator for use in school.
As the wind blows, the wind flap is lifted and the speed can be read off the measuring s
The device is made from mild steel except for the wind flap which is made from aluminium

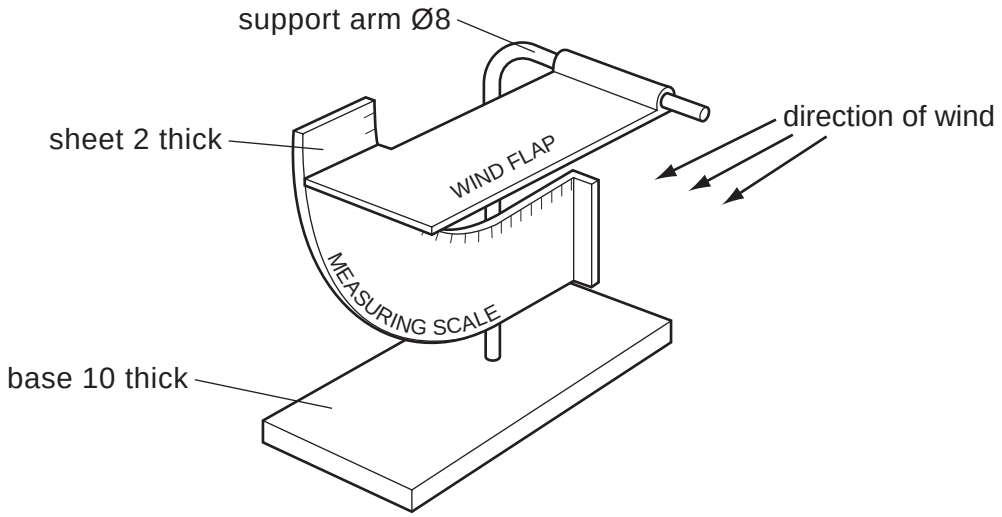

Fig. 8

(a) Describe how the weight of mild steel and aluminium has been considered in the design of the wind speed indicator.

Mild steel ..... [1]

Aluminium ..... [1]

(b) The mild steel used for the support arm was annealed before it was bent to shape.

(i) State the effects that annealing has on mild steel.

.....

..... [2]

(ii) Describe how the Ø8 mild steel rod would be annealed.

.....

..... [2]

(iii) Use sketches and notes to show how the Ø8 mild steel rod could be bent to shape.

[4]

(c) The end of the support arm is joined to the base by means of a screw thread.

Use sketches and notes to describe the process involved in cutting a screw thread:

(i) on the end of the support arm;

[3]

(ii) in the base.

[3]

(d) Use sketches and notes to show how the wind flap could be prevented from slipping off the end of the support arm.

[3]

(e) Fig. 9 shows the shape of the measuring scale partly marked out on 2 mm thick m
sheet.

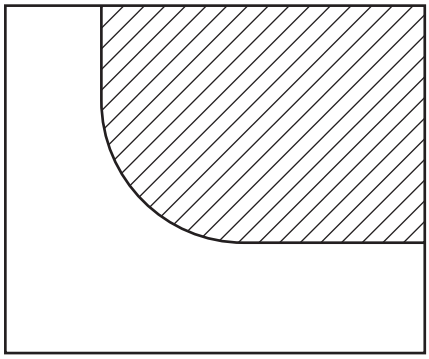

Fig. 9

Name the correct tool that could be used to:

(i) remove the waste metal;

..... [1]

(ii) produce a smooth edge to the curved shape.

..... [1]

(f) Use sketches and notes to show how the measuring scale could be attached to the support arm.

[4]

13 Fig. 10 shows details of a child's toy.

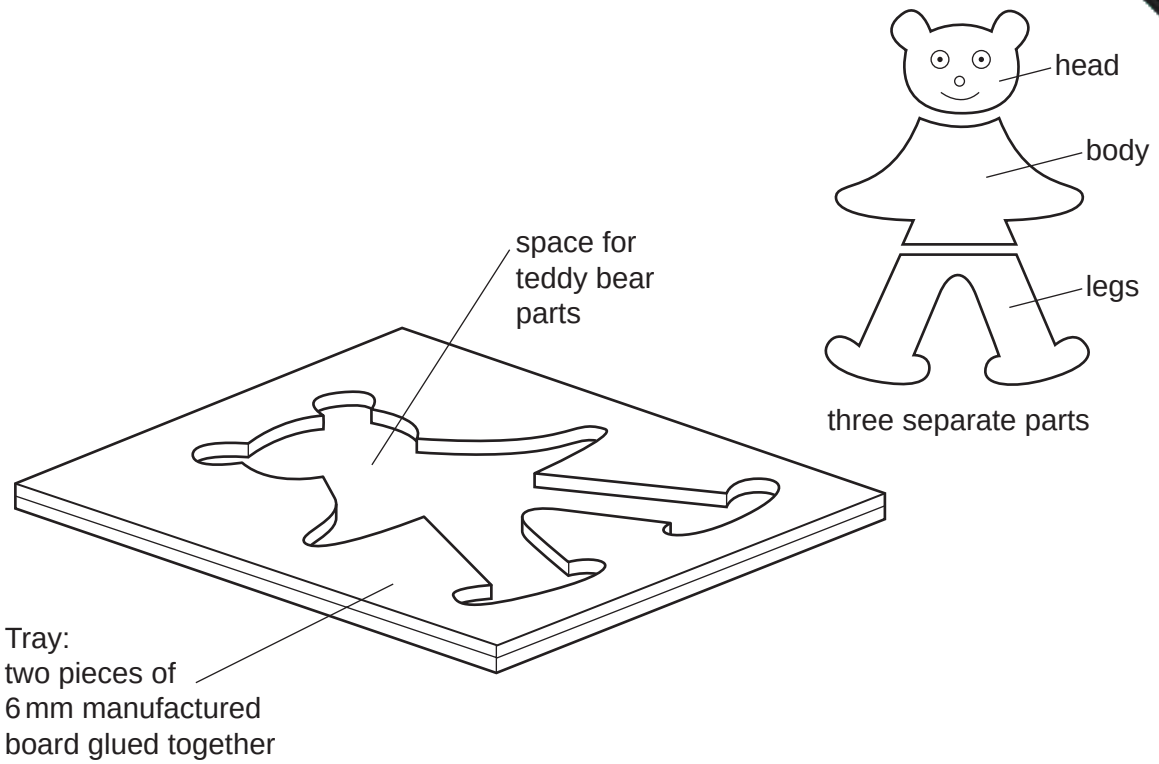

Fig. 10

(a) The separate parts of the teddy bear could be made from a plastic material or from wood.

Give **two** advantages of using a plastic material rather than wood.

1 ..... [1]

2 ..... [1]

(b) Give **two** advantages of constructing the tray from two separate pieces rather than one piece of manufactured board.

1 ..... [1]

2 ..... [1]

(c) Use sketches and notes to show how the space for the teddy bear parts could be of the manufactured board.

Include the following details:

- the name of the saw you would use;
- the method of smoothing the edges to the finished shape;
- **one** safety precaution you would take while involved in any of these processes.

[6]

(d) The two pieces of 6 mm thick manufactured board for the tray will be glued together using PVA wood adhesive.

(i) Describe how the adhesive would be applied.

..... [1]

(ii) Describe how the two pieces of manufactured board would be held together while the adhesive sets.

..... [1]

(iii) State approximately how long it would take for the joint to set.

..... [1]

(e) The three separate parts of the teddy bear are to be stored in the box shown in
The tray will be used as the lid of the box.

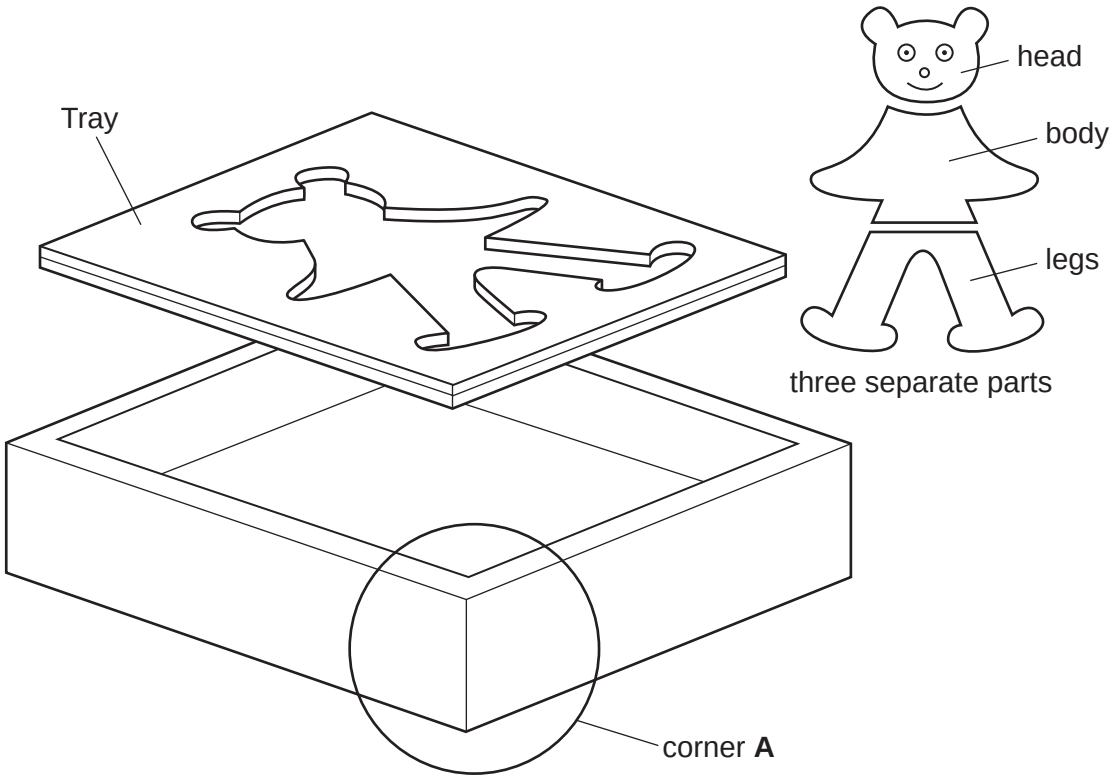

Fig. 11

(i) Use sketches and notes to show how the tray could be supported inside the box.

The tray must be level with the top of the box.

[4]

For Examiner's Use

(ii) Complete the drawing below to show a suitable joint, other than a butt joint, at corner **A**.

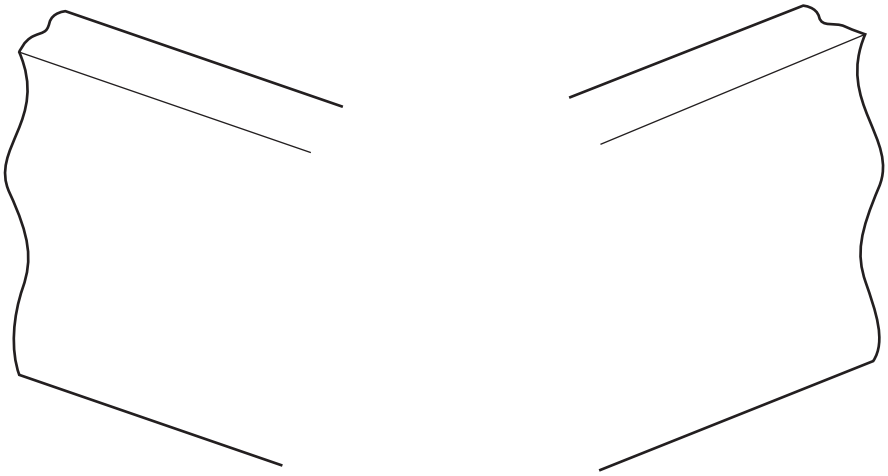

[3]

(iii) Name of joint at corner **A**.

..... [1]

(iv) Name **two** tools you would use to mark out the joint at corner **A**.

1 ..... [1]

2 ..... [1]

(v) Name **two** tools you would use to cut out the joint at corner **A**.

1 ..... [1]

2 ..... [1]