Cambridge IGCSE

Cambridge International Examinations
Cambridge International General Certificate of Secondary Education

CANDIDATE NAME	

CENTRE NUMBER						CANDIDATE NUMBER				

DESIGN AND TECHNOLOGY **0445/31**

Paper 3 Resistant Materials **May/June 2017**

1 hour

Candidates answer on the Question Paper.

No Additional Materials are required.

READ THESE INSTRUCTIONS FIRST

Write your Centre number, candidate number and name on all the work you hand in.
Write in dark blue or black pen.
You may use an HB pencil for any diagrams, graphs or rough working.
Do not use staples, paper clips, glue or correction fluid.
DO **NOT** WRITE IN ANY BARCODES.

Section A
Answer **all** questions in this section.

Section B
Answer **one** question in this section.

You may use a calculator.

At the end of the examination, fasten all your work securely together.
The number of marks is given in brackets [ ] at the end of each question or part question.
The total of the marks for this paper is 50.

This document consists of **17** printed pages and **3** blank pages.

DC (KN/SW) 145183

CAMBRIDGE International Examinations

[Turn over

Section A

Answer **all** questions in this section.

1 Complete the table below by naming each of the tools or items of equipment used to hold wood.

Name	**Name**
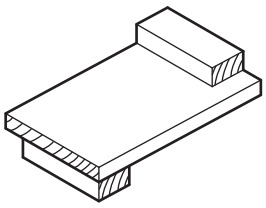	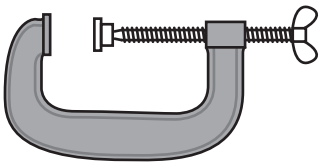
Name	**Name**
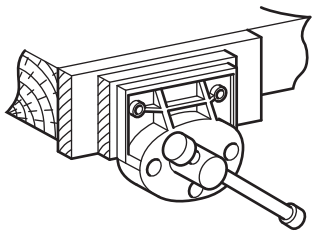	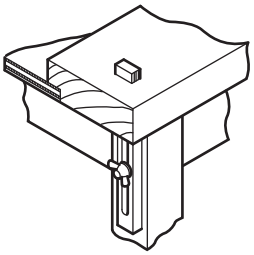

[4]

2 Fig. 1 shows two safety clothing [PPE] signs.

Fig. 1

Describe a workshop process where:

(a) a mask must be worn;

.....

(b) gloves must be worn.

.....[2]

3 Shape Memory Alloy [SMA] is an example of a 'smart' material.
Complete the statement by adding the correct term from the list below.

heated **quenched in water** **polished**

SMA will return to its original shape when it is .....[1]

4 Fig. 2 shows three boards that will be glued together to make a solid wood table top.

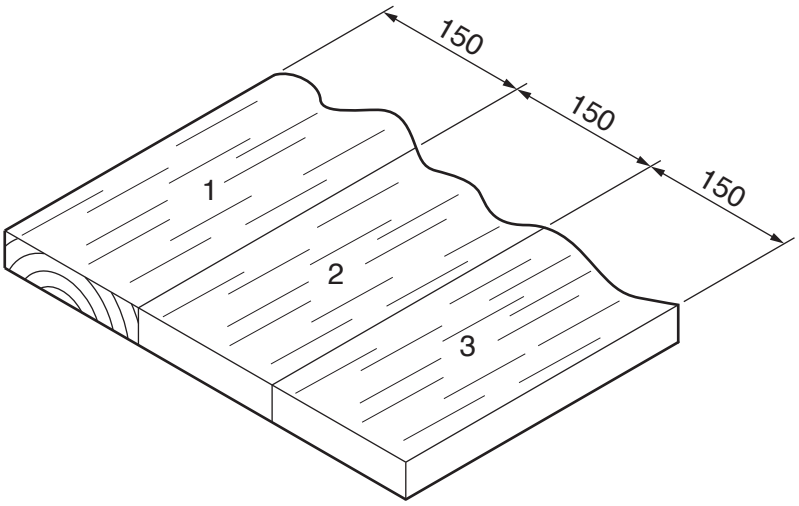

Fig. 2

(a) Give **one** reason why it would be necessary to join three boards together to make a solid wood table top.

.....[1]

(b) Complete Fig. 2 by drawing the end grain on boards 2 and 3 so that the table top would remain stable. [2]

(c) Name the type of cramps that would be used when gluing the boards together.

.....[1]

5 Complete the table by naming the correct metal from the list below to match each description.

mild steel **cast iron** **copper** **stainless steel** **brass** **aluminium**

Metal	Description
	hard, tough, used to make sink units
	hard, brittle, used to make metalwork vices
	lightweight, resists corrosion, used to make aircraft bodies

[3]

6 Fig. 3 shows the end of a length of wood.
Draw on Fig. 3 to show a chamfered edge and a bevelled edge.

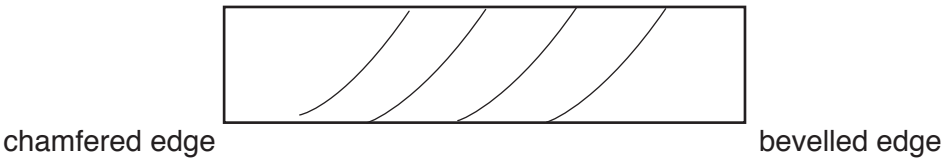

Fig. 3

[2]

7 Fig. 4 shows a tee square made from two pieces of acrylic.

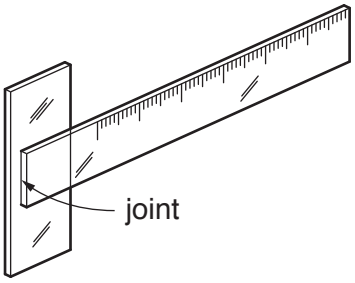

Fig. 4

Name a suitable method of joining the two pieces of acrylic together:

(a) temporarily;

.....

(b) permanently.

.....[2]

8 Fig. 5 shows a method of joining two wooden boards.

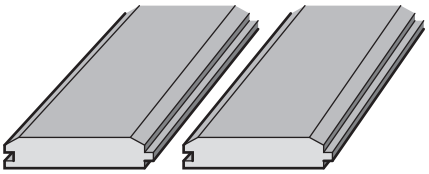

Fig. 5

Name the method of joining.

.....[1]

9 Fig. 6 shows a modelling knife.
The metal body of the knife is made in two parts that are screwed together.

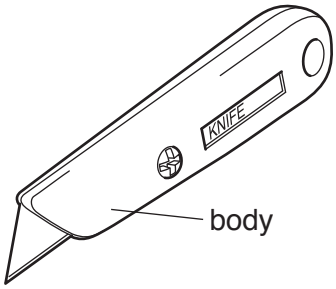

Fig. 6

(a) Name a process that could be used to produce the two parts for the body of the knife.

.....[1]

(b) Name a metal that could be used to make the body of the knife.

.....[1]

10 Complete the drawing of each tool shown below and describe its use.

Scriber	**Use**
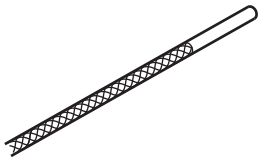	
Chuck key	**Use**
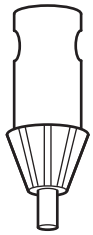	

[4]

Section B

Answer **one** question from this section.

11 Fig. 7 shows views of a child's table and a parts list.

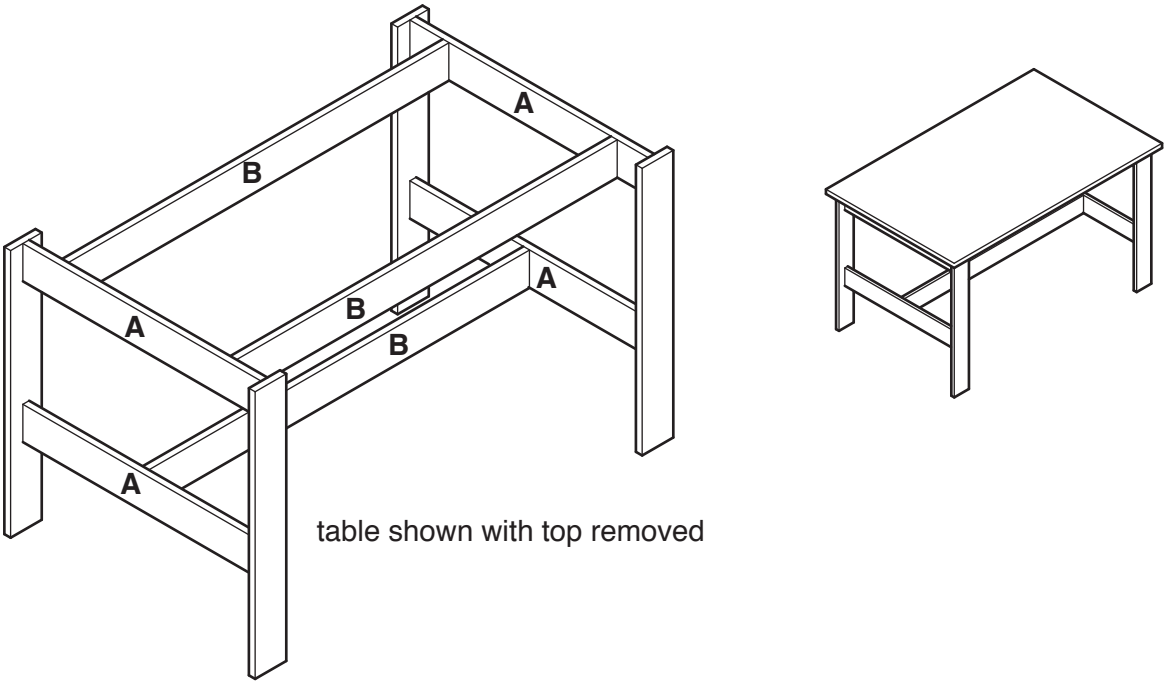

Part	Number Required	Length × Width × Thickness	Material
leg	4	450 × 60 × 15	softwood
end rail **A**	4	470 × 60 × 15	softwood
long rail **B**	3	740 × 60 × 15	softwood
table top	1	840 × 540 × 19	manufactured board

Fig. 7

(a) **(i)** Name a suitable softwood and manufactured board for parts of the table shown in the parts list.

Softwood .....

Manufactured board .....[2]

(ii) The legs and rails are all 60 wide × 15 thick.
Give **one** benefit to a manufacturer of using materials that are the same width and thickness.

.....[1]

(b) Give **two** ways in which the table top could be made more hardwearing for use by children.

1 .....

2 .....[2]

(c) The table top will be attached to the rails by means of screws.
Fig. 8 shows part of the table with the positions for two screw holes marked out.

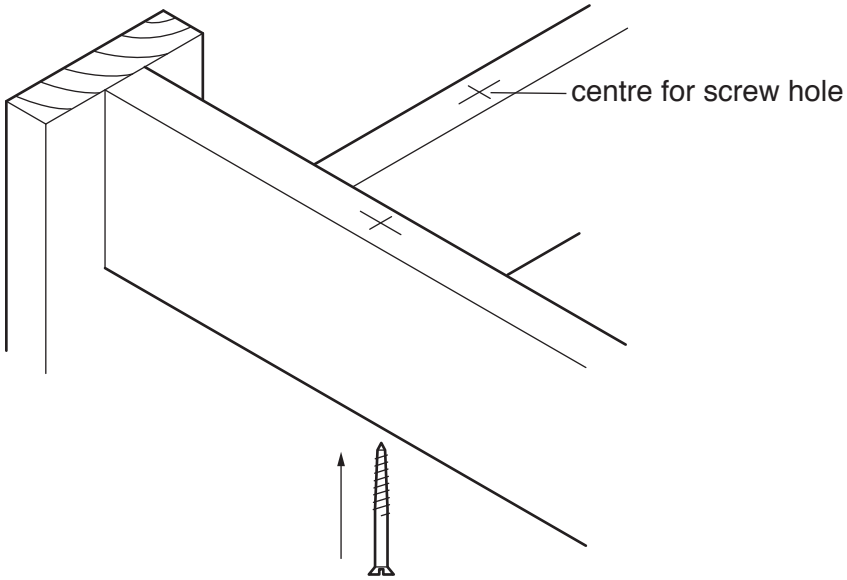

Fig. 8

(i) Use a sketch and notes to show how the holes could be drilled so that the screw head would be hidden.

[3]

(ii) Use sketches and notes to show how a knock-down (KD) fitting could be used to attach the table top to the rails.

[3]

(d) The rails and the legs will be joined using dowel joints.
A drilling jig is needed when drilling the holes for the dowel.

(i) Give **two** benefits of using a drilling jig when drilling the holes for the dowel.

1 .....

2 .....[2]

(ii) Fig. 9 shows an exploded view of a dowel joint between a rail and a leg.

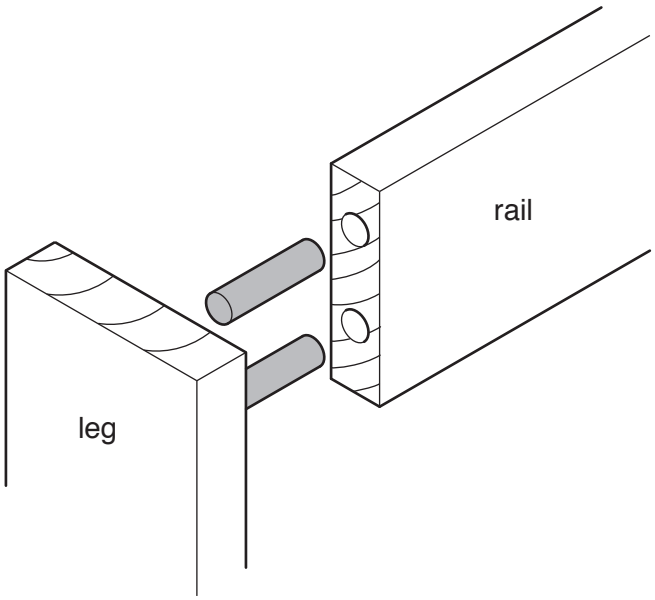

Fig. 9

Use sketches and notes to show a drilling jig that could be used when drilling holes in the ends of the rails.

[4]

(e) A container is required to store pens, pencils and other small items of equipment. Fig. 10 shows the area where the container will fit into the table top.

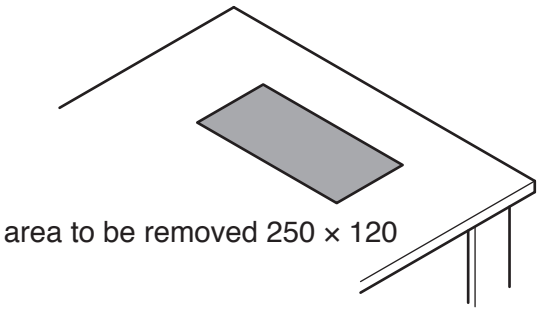

Fig. 10

(i) Use sketches and notes to show how the area could be removed and the edges made smooth.

[4]

(ii) Use sketches and notes to show a design for a container that could fit into the area cut out. Include details of materials and constructions used.

[4]

12 Fig. 11 shows views of a cycle rack that could be fixed to the wall of a garage or shed.

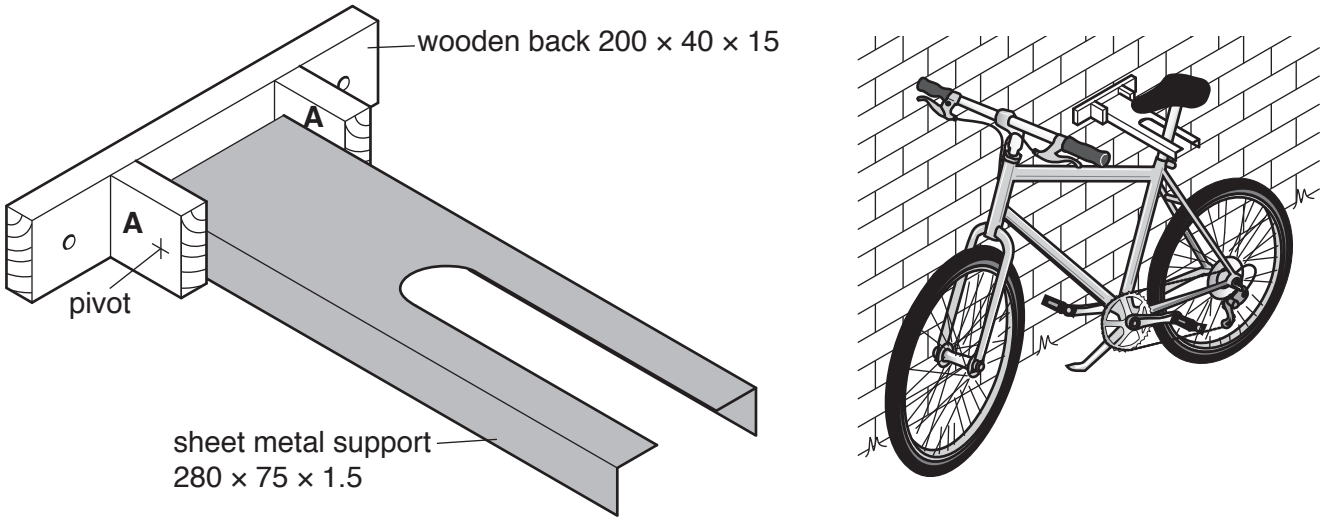

Fig. 11

(a) Give **two** items of research a designer would need to consider when designing a cycle rack.

1 .....

2 .....[2]

(b) Sketch and name a suitable method of joining parts **A** to the back shown in Fig. 11.

[4]

(c) Fig. 12 shows details of the sheet metal support.

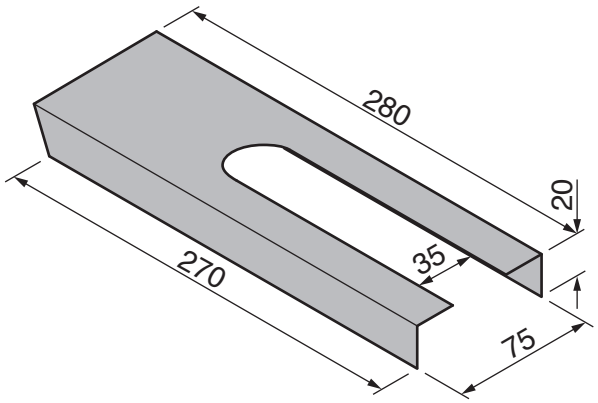

Fig. 12

An outline of the sheet of metal used to make the support is shown below.

(i) Draw on the outline the development (net) for the support.

not to scale [4]

(ii) Give **two** advantages of making the support for the cycle rack from non-ferrous metal rather than ferrous metal.

1 .....

2 .....[2]

(d) To make the support, the slot will be cut out and the metal will be bent to shape.

(i) Use sketches and notes to show how the slot could be cut out and the edges made smooth.

[4]

(ii) Use sketches and notes to show how the sheet metal could be bent to shape.

[3]

(e) Fig. 13 shows views of the back and support.
The support will be pivoted between parts **A** and will fold down when not in use.

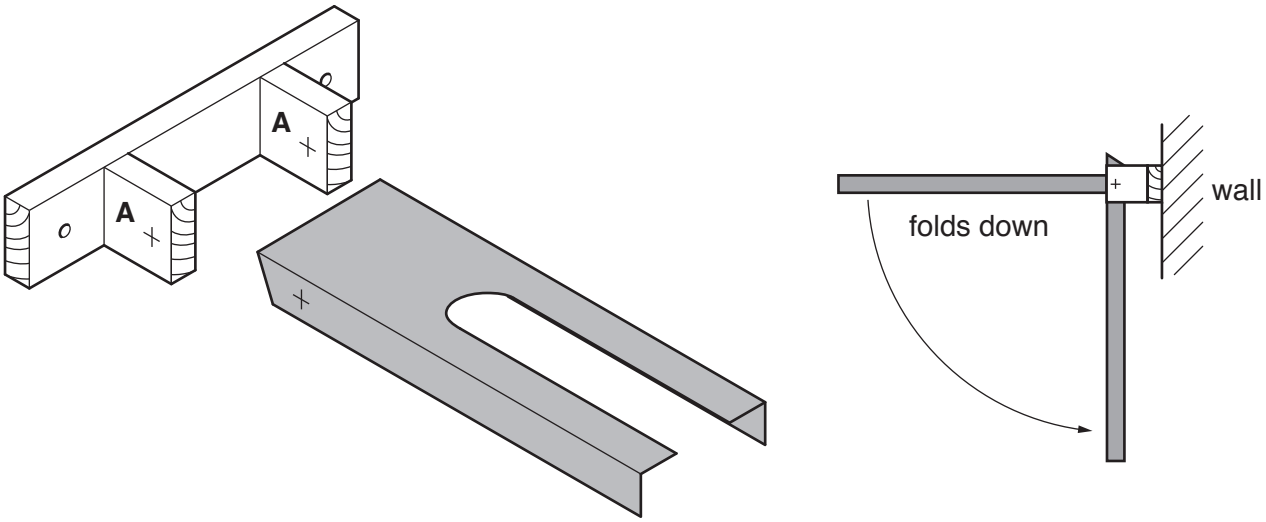

Fig. 13

Use sketches and notes to show how the support could be locked in a horizontal position as shown in Fig. 13.

[3]

(f) Fig. 14 shows a cycle helmet that is to be stored on the cycle rack.
Use sketches and notes to show a modification to any part of the cycle rack so that the helmet could be stored.

Fig. 14

[3]

BLANK PAGE

13 Fig. 15 shows an incomplete design for a toy lorry. The hopper is designed to tip.

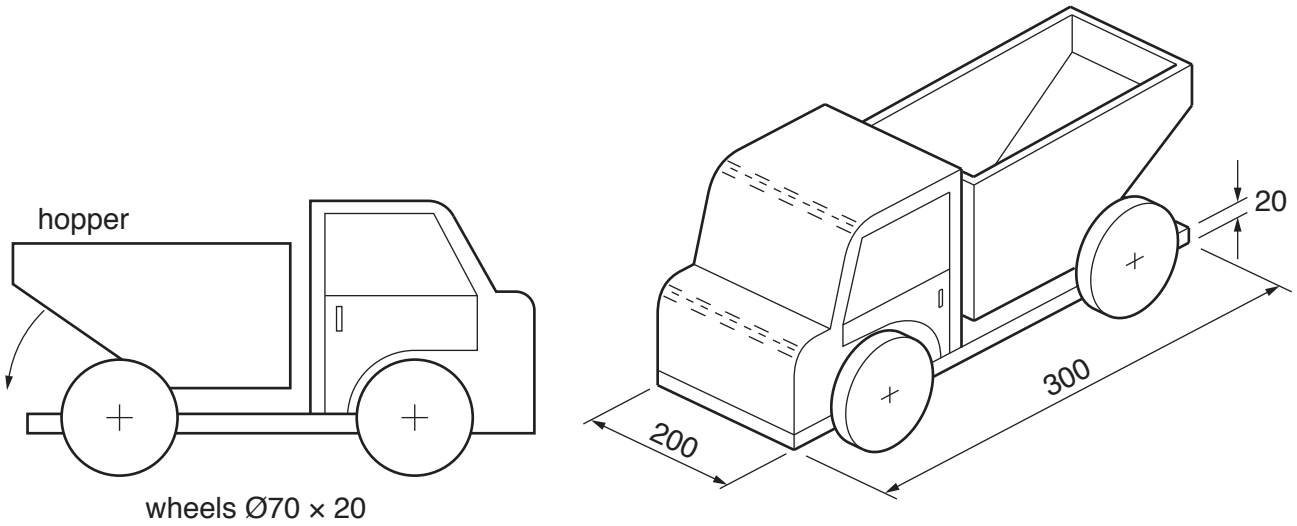

Fig. 15

(a) Give **three** specification points for the toy lorry.

1 .....

2 .....

3 .....[3]

(b) The wheels could be made from a hardwood using a woodturning lathe.
The wheels could also be made from thermoplastic and injection moulded.
Fig. 16 shows both methods of manufacture.

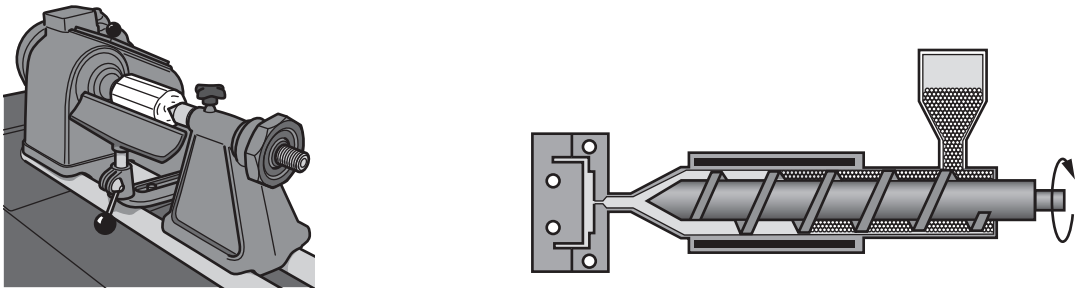

woodturning **injection moulding**

Fig. 16

(i) Describe **four** stages when making a set of wheels by means of **either** woodturning **or** injection moulding.

Chosen method .....

1 .....

2 .....

3 .....

4 .....[4]

(ii) Use sketches and notes to show how **one** of the wheels could be attached to the base of the lorry and allowed to turn freely.

[3]

(c) The hopper shown in Fig. 15 will be made from plastic by means of vacuum forming.
Use sketches and notes to show a design for a former that could be used to produce the hopper.

[4]

(d) Use sketches and notes to show how the hopper could be made to tip as shown in Fig. 15. Include details of materials, fittings and constructions used.

[6]

(e) Wooden toys can be painted or varnished to protect the wood.
Give **one** additional benefit of using:

(i) paint; .....

.....

(ii) varnish. .....

.....[2]

(f) Explain the benefits to a manufacturer of producing children's toys made from plastic rather than wood-based materials.

.....

.....

.....

.....[3]

BLANK PAGE

BLANK PAGE