* 0000800000001 *

Cambridge Assessment International Education

Cambridge IGCSE™

CANDIDATE NAME	

CENTRE NUMBER						CANDIDATE NUMBER				

* 5 6 6 6 5 3 2 7 1 8 *

GEOGRAPHY **0460/11**

Paper 1 Geographical Themes **May/June 2025**

1 hour 45 minutes

You must answer on the question paper.

You will need: Insert (enclosed)
Calculator
Ruler

INSTRUCTIONS

- Answer **three** questions in total, **one** from each section.
- Use a black or dark blue pen. You may use an HB pencil for any diagrams or graphs.
- Write your name, centre number and candidate number in the boxes at the top of the page.
- Write your answer to each question in the space provided.
- Do **not** use an erasable pen or correction fluid.
- Do **not** write on any bar codes.
- If additional space is needed, you should use the lined pages at the end of this booklet; the question number or numbers must be clearly shown.

INFORMATION

- The total mark for this paper is 75.
- The number of marks for each question or part question is shown in brackets [ ].
- The insert contains additional resources referred to in the questions.

LEDCs – Less Economically Developed Countries
MEDCs – More Economically Developed Countries

This document has **28** pages.

DC (WW/JG) 345213/6
© UCLES 2025

Section A

Answer **one** question from this section.

1 **(a)** Study Fig. 1.1, a graph showing information about the main reasons for international migration from four LEDCs in Africa.

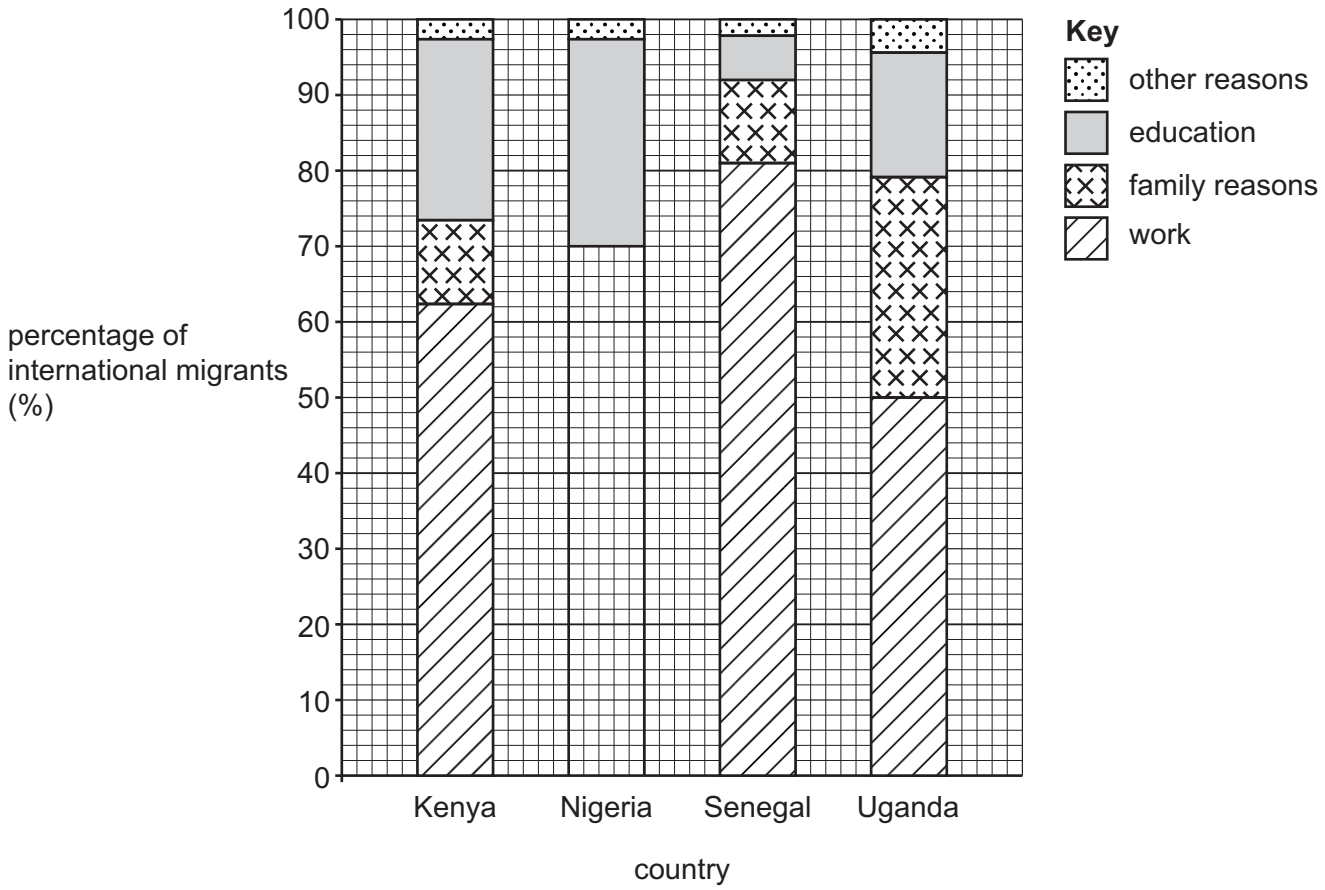

Fig. 1.1

(i) What percentage of international migrants from Kenya migrate for work?

.....% [1]

(ii) **Complete Fig. 1.1** by plotting the following data for Nigeria:

- work 50%
- family reasons 20%. [2]

DO NOT WRITE IN THIS MARGIN

(iii) Compare the reasons for international migration from Senegal and Uganda.
Do **not** use statistics.

.....

.....

.....

.....

.....

..... [3]

(iv) Explain why many people from LEDCs migrate to other countries for work.

.....

.....

.....

.....

.....

.....

.....

..... [4]

DO NOT WRITE IN THIS MARGIN

(b) Study Fig. 1.2, a graph showing information about the population structure of all international migrants from around the world in 2019.

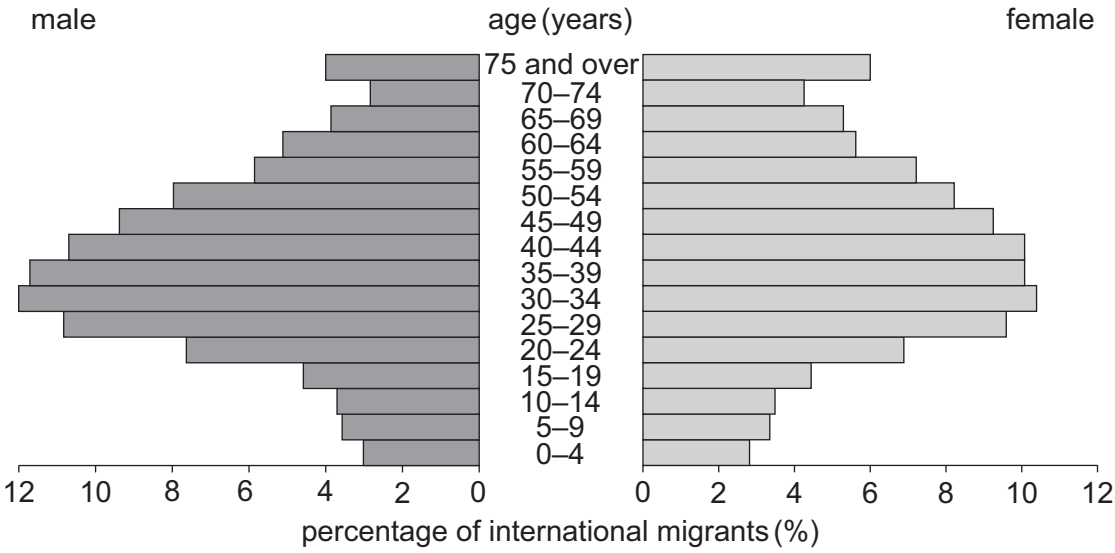

Fig. 1.2

(i) Using Fig. 1.2 **only**, describe the population structure of all international migrants.

.....

.....

.....

.....

.....

..... [3]

DO NOT WRITE IN THIS MARGIN

(ii) Describe the difficulties which many international migrants experience after they have moved to a new country.

.....

.....

.....

.....

.....

.....

.....

.....

.....

..... [5]

DO NOT WRITE IN THIS MARGIN

(c) For a country you have studied, describe the benefits and problems caused by large amounts of immigration.

Name of country .....

.....

.....

.....

.....

.....

.....

.....

.....

.....

.....

.....

.....

.....

.....

.....

.....

.....

.....

.....

.....

.....

.....

.....

.....

..... [7]

[Total: 25]

DO NOT WRITE IN THIS MARGIN

2 **(a)** Study Figs. 2.1, 2.2 and 2.3 (Insert), photographs showing different types of service in urban areas.

(i) Which photograph shows a low-order service?

Fig. ..... [1]

(ii) Put the services shown in Figs. 2.1, 2.2 and 2.3 in order of the size of their sphere of influence.

Fig. ..... largest sphere of influence

Fig. .....

Fig. ..... smallest sphere of influence

[2]

(iii) Explain why high-order services need a large threshold population.

.....

.....

.....

.....

.....

..... [3]

(iv) Explain why many services are located in the Central Business District (CBD) of urban settlements.

.....

.....

.....

.....

.....

.....

.....

..... [4]

DO NOT WRITE IN THIS MARGIN

(b) Study Table 2.1, which shows information about the population size and service provision in selected settlements in Wiltshire, a region in the UK.

Table 2.1

settlement	population	supermarkets	secondary schools	primary schools	food shops
Chippenham	28 065	3	3	10	11
Calne	13 606	1	2	3	6
Corsham	10 780	1	1	3	7
Bradford-on-Avon	9 326	1	1	2	7
Malmesbury	4 631	1	1	2	5
Box	3 439	0	0	1	2
Hullavington	1 247	0	0	1	1
Sutton Benger	986	0	0	1	0
Great Somerford	737	0	0	1	0
Grittleton	459	0	1	0	0

(i) Using Table 2.1, describe the relationship between the population size and service provision in Wiltshire. Refer to different settlements in your answer.

.....

.....

.....

.....

.....

..... [3]

DO NOT WRITE IN THIS MARGIN

(ii) Suggest reasons why there is a relationship between the population of settlements and the number of services provided as shown in Table 2.1.

.....

.....

.....

.....

.....

.....

.....

.....

.....

..... [5]

DO NOT WRITE IN THIS MARGIN

(c) Explain the reasons for the growth and functions of a named settlement you have studied.

Name of settlement .....

.....

.....

.....

.....

.....

.....

.....

.....

.....

.....

.....

.....

.....

.....

.....

.....

.....

.....

.....

.....

.....

.....

.....

.....

..... [7]

[Total: 25]

DO NOT WRITE IN THIS MARGIN

Section B

Answer **one** question from this section.

3 **(a)** Study Fig. 3.1, a sketch showing weather instruments.

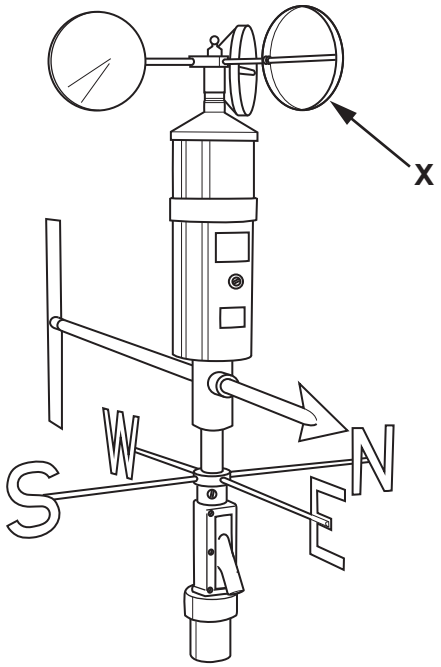

Fig. 3.1

(i) Name the weather instrument labelled **X** in Fig. 3.1.

..... [1]

(ii) State **two** types of weather data which can be obtained by using the instruments shown in Fig. 3.1.

1 .....

2 .....
[2]

(iii) Describe a suitable location for the instruments shown in Fig. 3.1.

.....

.....

.....

.....

.....

..... [3]

DO NOT WRITE IN THIS MARGIN

(iv) Explain how weather data is obtained from the instruments shown in Fig. 3.1.

.....

.....

.....

.....

.....

.....

.....

..... [4]

(b) Study Table 3.1, which shows weather data collected at Kakinada, India, for 14 days in September.

Table 3.1

date in Sept	temperature (°C)		humidity (%)	atmospheric pressure (mb)	wind (km/h)	rainfall (mm)
	maximum	minimum				
1	33	25	85	1005.4	2	3
2	34	26	81	1005.5	3	0
3	31	25	84	1008	2	4
4	34	26	81	1010	1	0
5	33	26	81	1008.9	1	0
6	33	25	86	1009.3	1	16
7	32	24	82	1008.8	3	0
8	32	26	79	1008.4	2	0
9	33	27	77	1007.5	3	0
10	34	26	74	1007.1	2	0
11	34	25	74	1006.1	1	0
12	30	25	85	1006.1	3	0.9
13	28	24	93	1006.4	3	1
14	28	25	88	1003.9	5	0.3

(i) Identify the dates in September with:

the highest range of temperature .....

the highest atmospheric pressure .....

the most rainfall. .....

[3]

DO NOT WRITE IN THIS MARGIN

(ii) Explain how data about rainfall can be collected for a period of 14 days.

.....

.....

.....

.....

.....

.....

.....

.....

.....

..... [5]

DO NOT WRITE IN THIS MARGIN

(c) For a named area you have studied, describe the impacts of tropical storms.

Name of area .....

.....

.....

.....

.....

.....

.....

.....

.....

.....

.....

.....

.....

.....

.....

.....

.....

.....

.....

.....

.....

.....

.....

.....

..... [7]

[Total: 25]

DO NOT WRITE IN THIS MARGIN

4 **(a)** Study Fig. 4.1, a map which shows the distribution of volcanoes.

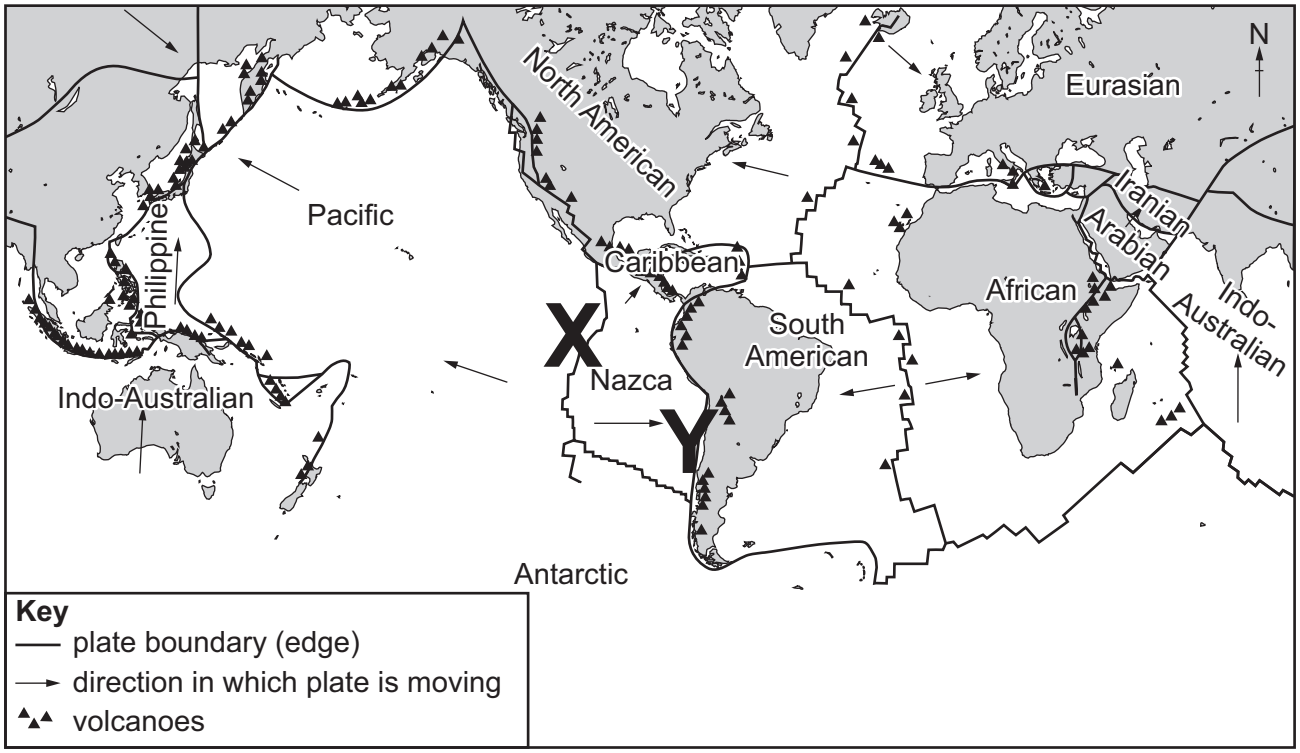

Fig. 4.1

(i) Identify the compass direction in which the Indo-Australian plate is moving.

..... [1]

(ii) Identify the type of plate boundaries at **X** and **Y**.

X .....

Y .....

[2]

(iii) Using Fig. 4.1 **only**, describe the distribution of volcanoes.

.....

.....

.....

.....

.....

..... [3]

DO NOT WRITE IN THIS MARGIN

(iv) Explain why volcanoes are hazardous for people.

.....

.....

.....

.....

.....

.....

.....

..... [4]

(b) Study Fig. 4.2 (Insert), a photograph of the crater of a volcano on the island of Nisyros, Greece.

(i) Describe the characteristics of the crater of the volcano shown in Fig. 4.2.

.....

.....

.....

.....

.....

..... [3]

(ii) Explain why people live close to volcanoes.

.....

.....

.....

.....

.....

.....

.....

.....

.....

..... [5]

DO NOT WRITE IN THIS MARGIN

(c) Describe the causes of an **earthquake** in an area you have studied.

Name of area .....

.....

.....

.....

.....

.....

.....

.....

.....

.....

.....

.....

.....

.....

.....

.....

.....

.....

.....

.....

.....

.....

.....

.....

..... [7]

[Total: 25]

DO NOT WRITE IN THIS MARGIN

Section C

Answer **one** question from this section.

5 **(a)** Study Fig. 5.1, a graph showing the number of international tourists visiting Boston in the USA between 2009 and 2022.

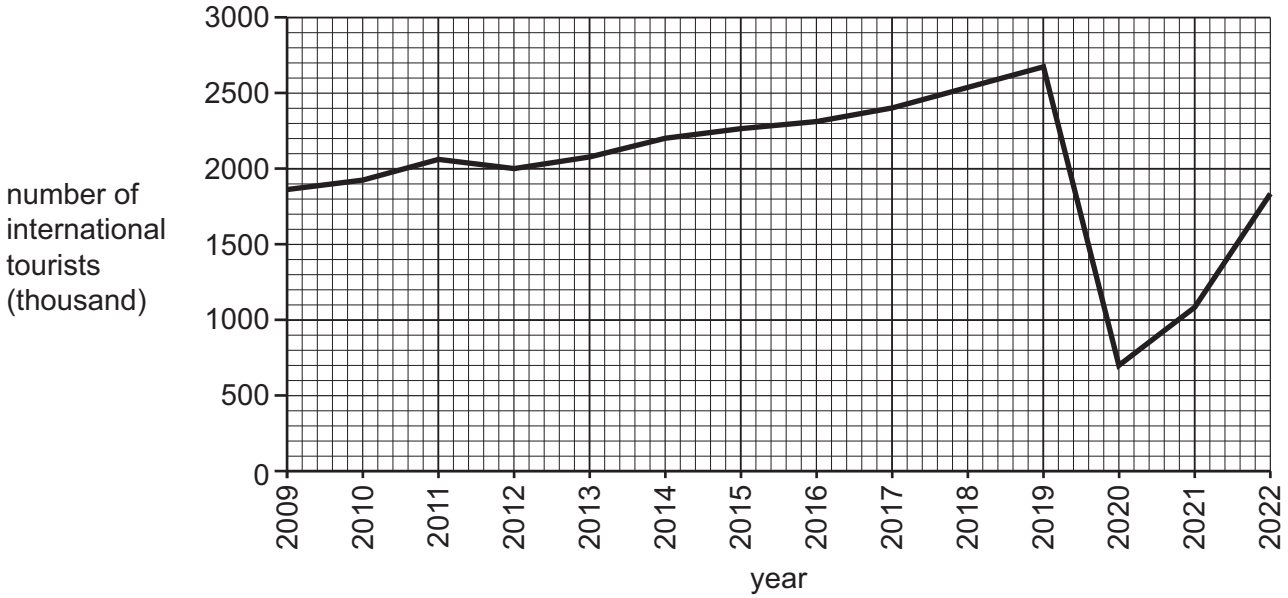

Fig. 5.1

(i) How many international tourists visited Boston in 2009?

..... thousand [1]

(ii) Describe the impact of the global pandemic in 2020 on the number of tourists visiting Boston in the USA.
You should use statistics.

.....

.....

.....

..... [2]

DO NOT WRITE IN THIS MARGIN

(iii) Suggest reasons why tourism is important to the local economy of Boston.

.....

.....

.....

.....

.....

..... [3]

(iv) Explain **two** reasons why the number of people visiting tourist destinations may vary **during the year**.

1 .....

.....

.....

.....

2 .....

.....

.....

.....

[4]

DO NOT WRITE IN THIS MARGIN

(b) Study Fig. 5.2 (Insert), a photograph of an area where tourism is important.

(i) State **three** different ways that tourism may damage the **natural environment** in the area shown in Fig. 5.2.

1 .....

.....

2 .....

.....

3 .....

.....

[3]

(ii) Suggest how the tourist industry may cause **problems for people** living in or around the area shown in Fig. 5.2.

.....

.....

.....

.....

.....

.....

.....

.....

.....

..... [5]

DO NOT WRITE IN THIS MARGIN

(c) For an area you have studied where the tourist industry is important, describe the attractions of the physical and human landscapes.

Name of area .....

.....

.....

.....

.....

.....

.....

.....

.....

.....

.....

.....

.....

.....

.....

.....

.....

.....

.....

.....

.....

.....

.....

.....

..... [7]

[Total: 25]

DO NOT WRITE IN THIS MARGIN

6 **(a)** Study Fig. 6.1, a graph showing information about the percentage of people using different methods of water supply in three settlements in Botswana, an LEDC in Africa.

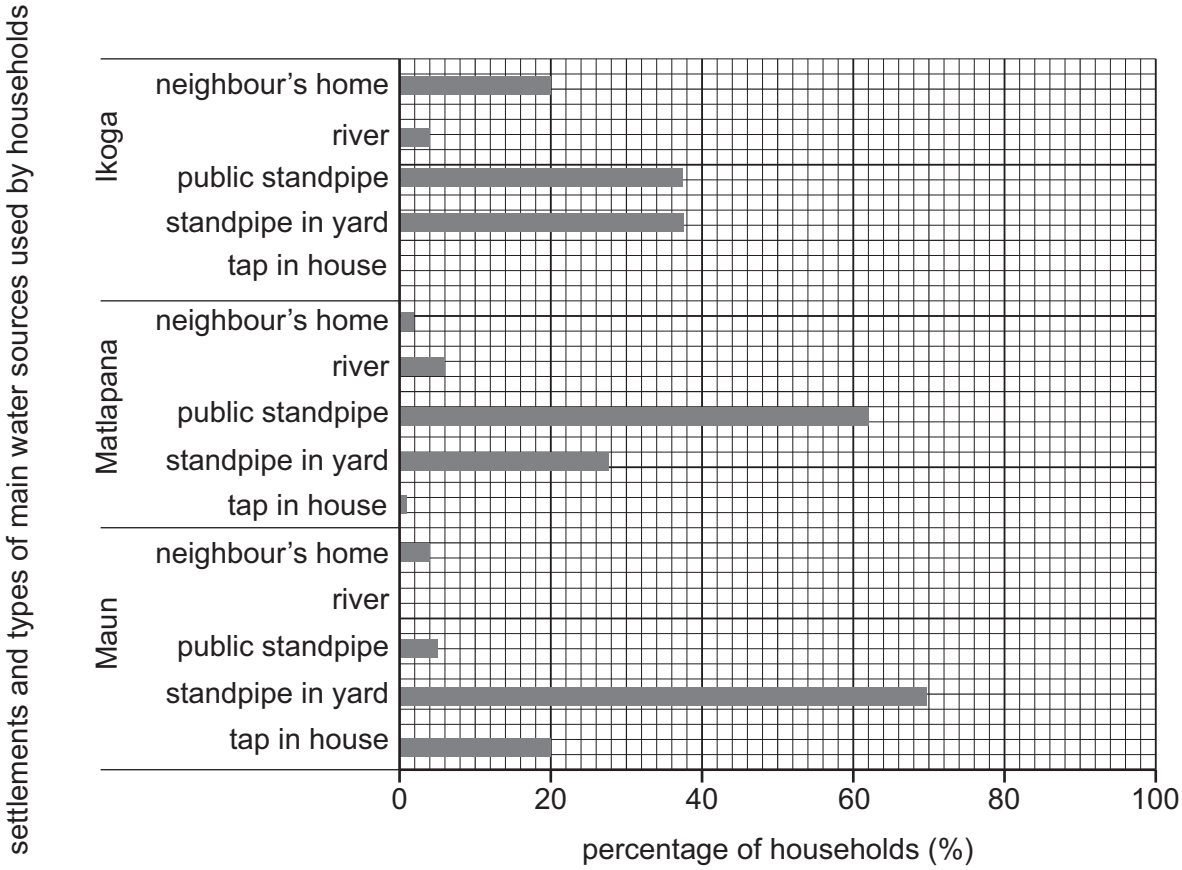

Fig. 6.1

(i) What percentage of households in Matlapana obtain their water from rivers?

.....% [1]

(ii) Suggest **two** problems for households which rely on water from rivers.

1 .....

.....

2 .....

.....

[2]

DO NOT WRITE IN THIS MARGIN

(iii) Compare the methods used by households in Ikoga and Maun to obtain their water. Do **not** use statistics.

.....

.....

.....

.....

.....

..... [3]

(iv) Explain why it is important to improve water supplies in LEDCs.

.....

.....

.....

.....

.....

.....

.....

..... [4]

DO NOT WRITE IN THIS MARGIN

(b) Study Fig. 6.2 (Insert), maps showing the use of water for agriculture, industry and domestic purposes.

(i) Using Fig. 6.2 **only**, compare the percentages of water used for **domestic purposes** in Africa and Australasia.
You should use statistics.

.....

.....

.....

.....

.....

..... [3]

(ii) Explain why the percentage of water used in agriculture and in industry varies between countries.

.....

.....

.....

.....

.....

.....

.....

.....

.....

..... [5]

DO NOT WRITE IN THIS MARGIN

(c) Transnational corporations (TNCs) operate in many parts of the world.

Describe the impacts of a TNC on the people and natural environment in a named country you have studied.

Name of transnational corporation (TNC) .....

Name of country .....

.....

.....

.....

.....

.....

.....

.....

.....

.....

.....

.....

.....

.....

.....

.....

.....

.....

.....

.....

.....

.....

.....

..... [7]

[Total: 25]

DO NOT WRITE IN THIS MARGIN

Additional page

If you use the following page to complete the answer to any question, the question number must be clearly shown.

DO NOT WRITE IN THIS MARGIN

Additional page

If you use the following page to complete the answer to any question, the question number must be clearly shown.

DO NOT WRITE IN THIS MARGIN

Additional page

If you use the following page to complete the answer to any question, the question number must be clearly shown.

.....

.....

.....

.....

.....

.....

.....

.....

.....

.....

.....

.....

.....

.....

.....

.....

.....

.....

.....

.....

The boundaries and names shown, the designations used and the presentation of material on any maps contained in this question paper/insert do not imply official endorsement or acceptance by Cambridge Assessment International Education concerning the legal status of any country, territory, or area or any of its authorities, or of the delimitation of its frontiers or boundaries.

Permission to reproduce items where third-party owned material protected by copyright is included has been sought and cleared where possible. Every reasonable effort has been made by the publisher (UCLES) to trace copyright holders, but if any items requiring clearance have unwittingly been included, the publisher will be pleased to make amends at the earliest possible opportunity.

To avoid the issue of disclosure of answer-related information to candidates, all copyright acknowledgements are reproduced online in the Cambridge Assessment International Education Copyright Acknowledgements Booklet. This is produced for each series of examinations and is freely available to download at www.cambridgeinternational.org after the live examination series.

Cambridge Assessment International Education is part of Cambridge Assessment. Cambridge Assessment is the brand name of the University of Cambridge Local Examinations Syndicate (UCLES), which is a department of the University of Cambridge.

© UCLES 2025

DO NOT WRITE IN THIS MARGIN