www.xtrapapers.com

Rewarding Learning

ADVANCED SUBSIDIARY (AS)
General Certificate of Education
2016

Centre Number

Candidate Number

Physics

Assessment Unit AS 3
assessing
Practical Techniques
Session 1

AY131

[AY131]

WEDNESDAY 11 MAY, MORNING

TIME

1 hour 30 minutes.

INSTRUCTIONS TO CANDIDATES

Write your Centre Number and Candidate Number in the spaces provided at the top of this page.
Turn to page 2 for further Instructions and Information.

Question Number	Marks	Remark
1		
2		
3		
4		
5		
Total Marks		

www.xtrapapers.com

INSTRUCTIONS TO CANDIDATES

Answer **all** the questions in this booklet. Rough work and calculations must also be done in this booklet. Except where instructed, do **not** describe the apparatus or experimental procedures.
The Teacher/Supervisor will tell you the order in which you are to answer the questions.
One hour is to be spent on Section A and 30 minutes on Section B.
Section A consists of four short experimental tests. **You will have access to the apparatus for 13 minutes for each of the tests.** At the end of this 13-minute experimental period there is a 2-minute changeover to the area set aside for the next test. Any spare time before the start of the next test may be used to write up anything you have not yet completed.
At the end of your Section A work you will be told to move to the area set aside for Section B.
Section B consists of one question in which you will analyse a set of experimental results.

INFORMATION FOR CANDIDATES

The total mark for this paper is 40.
Section A and Section B carry 20 marks each.
Figures in brackets printed down the right-hand side of pages indicate the marks awarded to each question or part question.
You may use an electronic calculator.

www.xtrapapers.com

BLANK PAGE

(Questions start overleaf)

www.xtrapapers.com

Section A

Examiner Only	
Marks	Remark

1 **(a)** **(i)** Place the straight edge of the semicircular transparent block on the long line XY in **Fig. 1.1**. The **centre** of the block's straight edge should be at the point where the line marked "normal" cuts XY. The curved edge of the block lies below **XY** as shown by the dashed line.

On **Fig. 1.1**, direct a ray of light along the line marked "ray 1". Mark the position of the refracted ray and complete **Fig. 1.1** by drawing the refracted ray.
On **Fig. 1.1**, mark the angle between the refracted ray and the normal and label it 'α'.

Measure the angle marked θ and the angle marked α and record their values below.

θ = _____ °

α = _____ ° [2]

(ii) Determine the refractive index, n, of the material from which the transparent block is made.

n = _____ [1]

www.xtrapapers.com

Examiner Only	
Marks	Remark

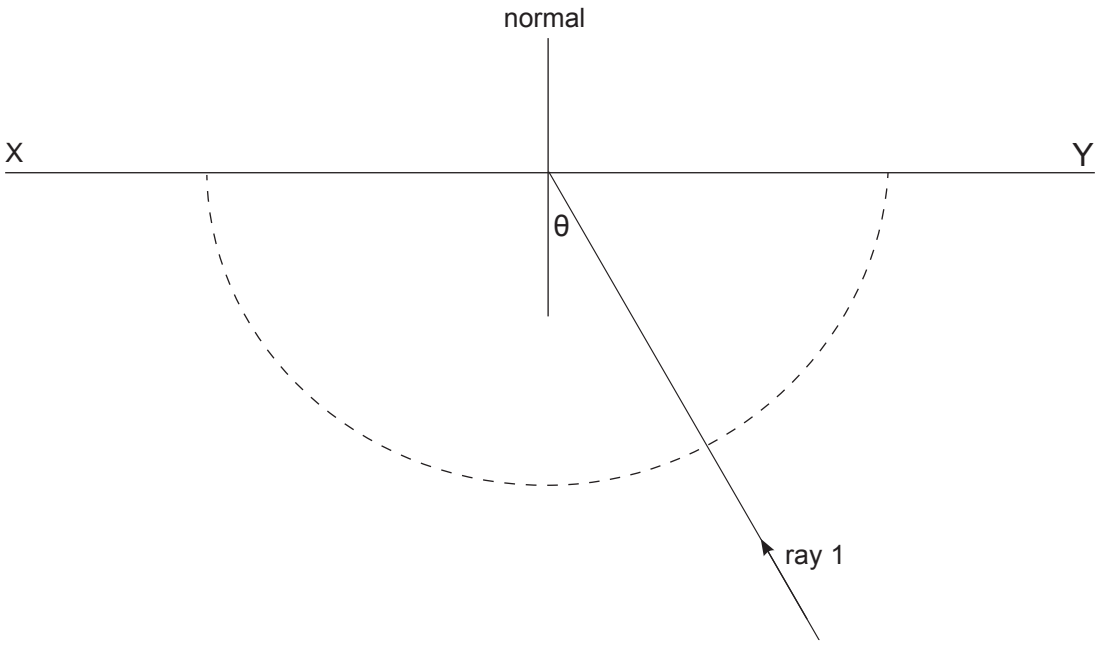

Fig. 1.1

www.xtrapapers.com

Examiner Only	
Marks	Remark

(b) On **Fig. 1.2**, replace the block exactly as in **(a)(i)**.

Increase the angle of incidence, θ, in the block until the ray is **just** totally internally reflected.

Mark the position of the corresponding incident ray.

Remove the block and complete **Fig. 1.2** by drawing the incident ray and labelling the critical angle 'C'.

Measure angle C and record the value below.

C = _____ ° [1]

The critical angle and refractive index are related by **Equation 1.1**

$$n \sin C = K \qquad \textbf{Equation 1.1}$$

where ***K*** is a constant.

(c) Determine the value of ***K***.

K = _____ [1]

www.xtrapapers.com

Examiner Only	
Marks	Remark

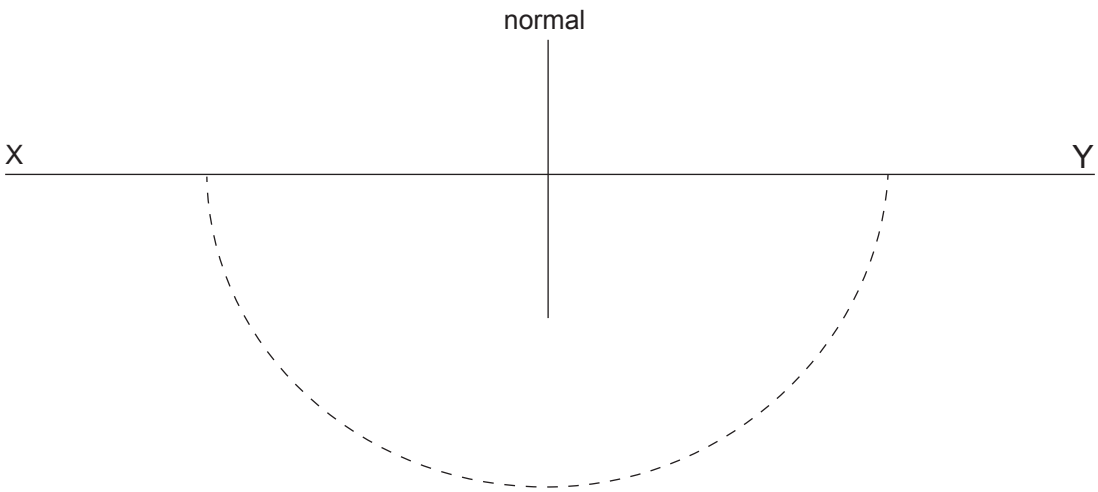

Fig. 1.2

www.xtrapapers.com

Examiner Only	
Marks	Remark

2 You are provided with the circuit shown in **Fig. 2.1**. The value of resistance R_1 is to be determined by taking measurements of the potential difference across the terminals of the variable power supply and across resistor R_1 for different values of R_2.

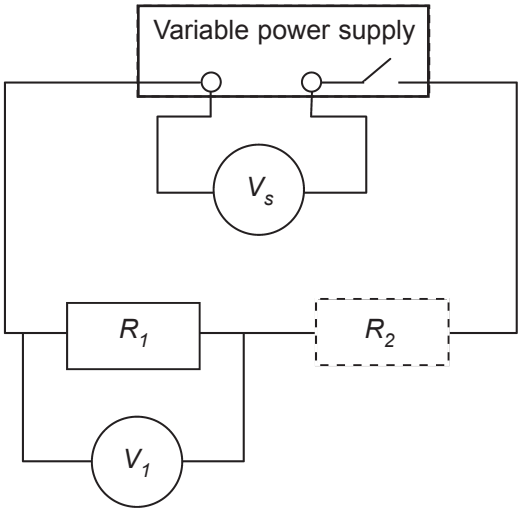

Fig. 2.1

(a) Use the ohmmeter to measure the resistance of the resistors labelled R_{2a}, R_{2b} and R_{2c}.
Record these values in **Table 2.1** in the column headed R_2/Ω. [1]

Table 2.1

Resistor	R_2/Ω	V_s/V	V_1/V	R_1/Ω
R_{2a}				
R_{2b}				
R_{2c}				

www.xtrapapers.com

Examiner Only	
Marks	Remark

(b) **(i)** Insert resistor R_{2a} into the circuit at position R_2 as shown in **Fig. 2.1**. Adjust the variable power supply so that V_s has a value between 4 V and 5 V and record the values for V_s and V_1 in **Table 2.1**.

(ii) Remove R_{2a} and replace it by resistor R_{2b}. Adjust the variable power supply so that V_s has a value between 7 V and 8 V and record the new values for V_s and V_1 in **Table 2.1**.

(iii) Remove R_{2b} and replace it by resistor R_{2c}. Adjust the variable power supply so that V_s has a value between 10 V and 11 V and record the new values for V_s and V_1 in **Table 2.1**.

[2]

(c) Theory states that the unknown resistance R_1 is linked to the other variables by **Equation 2.1**.

$$R_1 = \frac{V_1 R_2}{V_s - V_1} \qquad \textbf{Equation 2.1}$$

(i) Use **Equation 2.1** to calculate a value for R_1 for each value of R_2 and record the values in **Table 2.1**. [1]

(ii) Comment on the reliability of the R_1 values obtained and justify your comment.

_____

_____

_____ [1]

www.xtrapapers.com

Examiner Only	
Marks	Remark

3 In this question you are to obtain a value for the length of the metal wire from which a paper clip is made and to estimate the uncertainties in the length and cross-sectional area of the wire.

Carefully straighten the paper clip as best you can.

(a) **(i)** Use a ruler to measure **one** value for the length, *L*, of the straightened clip. Estimate the absolute uncertainty in your value for length, *L*. Record your answers, with the appropriate unit, in the spaces below.

L = _____ ± _____ [1]

(ii) Explain how you got this value for the absolute uncertainty.

_____

_____

_____ [1]

(b) Use a micrometer screw gauge to obtain a **reliable** value for the diameter, *d*.

d = _____ mm [1]

www.xtrapapers.com

Examiner Only	
Marks	Remark

(c) The wire has a circular cross section. **Equation 3.1** states the relationship between the area, A, and diameter, d, of a circle.

$$A = \frac{\pi d^2}{4} \qquad \textbf{Equation 3.1}$$

Determine the percentage uncertainty, $\%U_A$, in the value for A, given that the absolute uncertainty in using the micrometer screw gauge is ± 0.01 mm.

$\%U_A =$ _____ [2]

www.xtrapapers.com

Examiner Only	
Marks	Remark

4 A newtonmeter is attached to a wooden block using string, as shown in **Fig. 4.1**. The size of the frictional force between the wooden block and the bench is the value on the newtonmeter when the block is pulled so that it moves at a **steady speed**.

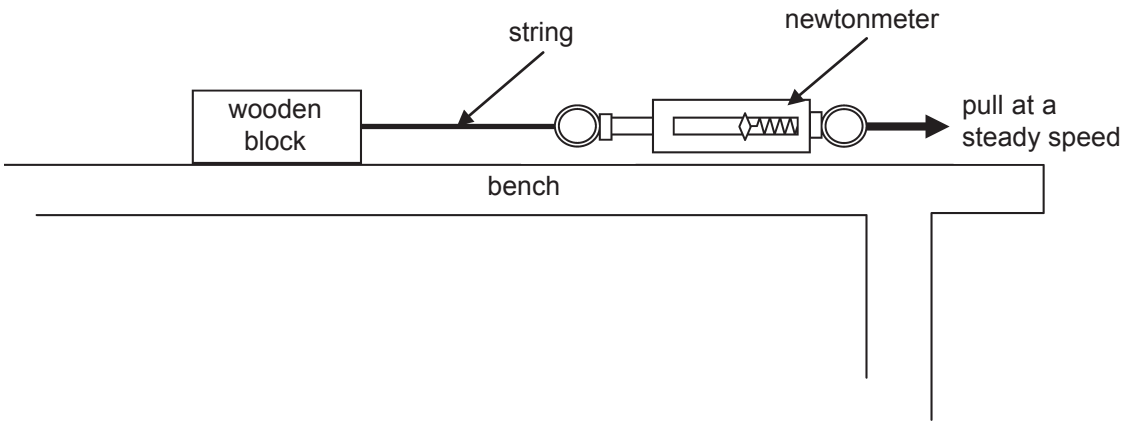

Fig. 4.1

(a) (i) Use the top pan balance to measure the mass of the wooden block. Record the value in the shaded cell in **Table 4.1**.

(ii) Pull the block of wood along the desk, for about a metre, at a steady speed and record the frictional force in **Table 4.1**. Repeat the procedure until you consider the results to be consistent.

Table 4.1

Total mass moved/g	Frictional Force/N	Mean frictional force/N

www.xtrapapers.com

Examiner Only	
Marks	Remark

(iii) Next, add a 500 g mass to the top of the wooden block. Record the total mass in **Table 4.1**.

(iv) Pull the block of wood with 500 g on top along the desk for about a metre and record the frictional force in **Table 4.1**. Repeat the procedure until you consider the results to be consistent.

(v) Add a second 500 g mass and repeat the procedure, recording values in **Table 4.1**. [2]

(b) Determine the mean frictional force for each mass. Record your values of force in **Table 4.1**. [1]

(c) Below are three possible relationships between the frictional force, F, and the mass, m, of the object moved,

$F = \beta m^2$ **Equation 4.1**

$F = \beta m$ **Equation 4.2**

$F = \dfrac{\beta}{m}$ **Equation 4.3**

where β is a constant.

Select which relationship best fits the data you have recorded in **Table 4.1** and justify your choice.

Relationship = _____

_____

_____

_____

[2]

www.xtrapapers.com

BLANK PAGE

www.xtrapapers.com

Section B

Examiner Only	
Marks	Remark

5 An electric current flowing through a copper wire is due to the movement of electrons. The average speed, v, of the electrons (in m s^{-1}) moving towards the positive terminal of the power supply (the drift speed) is given by the relationship in **Equation 5.1**,

$$v = \frac{1}{5.33 \times 10^{10}\, d^2} \qquad \textbf{Equation 5.1}$$

where d is the diameter of the copper wire (in m).

(a) (i) Complete **Table 5.1** by calculating the electron drift speed, in m s^{-1}, for the following wire diameters. Give all drift speeds to 3 significant figures.

Table 5.1

***d*/mm**	***v*/m s^{-1}**
0.711	
0.559	
0.376	
0.234	
0.152	

[3]

(ii) It is possible to draw a **linear** graph to show the relationship between v and d. State what should be plotted on each axis and the numerical value for the gradient along with its unit.

y-axis = _____

x-axis = _____

Gradient = _____ unit = _____

[4]

www.xtrapapers.com

Examiner Only	
Marks	Remark

(b) **Table 5.2** provides data showing the variation of drift speed, v, with current, I, through a wire of cross-sectional area $8.82 \times 10^{-7}\,m^2$.

Table 5.2

I/mA	v/μm s^{-1}
193	15.8
378	30.8
429	35.9
547	46.6
639	52.6

On the grid of **Fig. 5.1** draw a graph of I (y-axis) against v (x-axis).

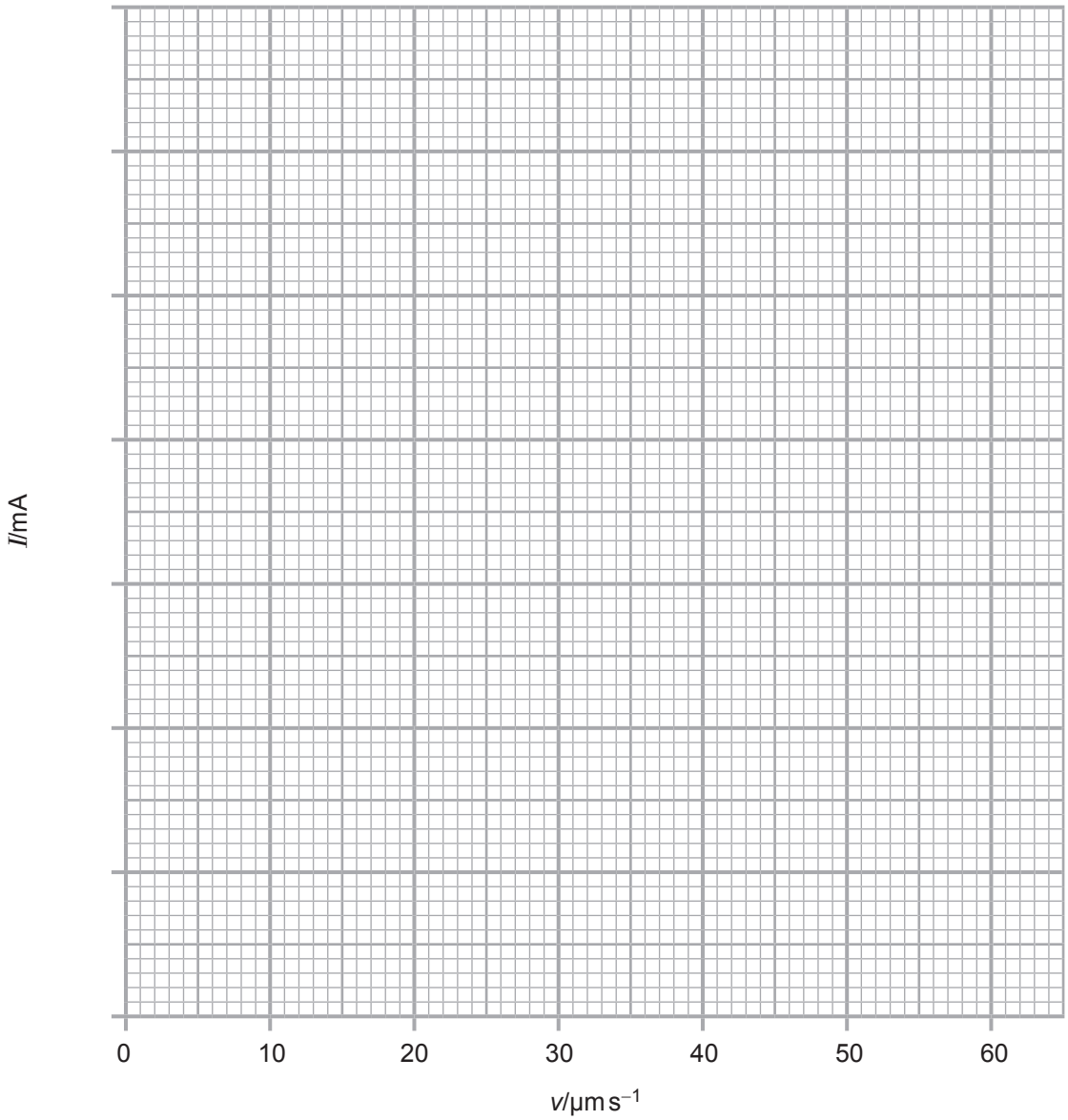

Fig. 5.1

[4]

www.xtrapapers.com

Examiner Only	
Marks	Remark

(c) **(i)** Determine the gradient of the graph drawn in **Fig. 5.1** and state the unit in which it is measured.

Gradient = _____ unit = _____

[4]

The gradient, m, of the graph in **Fig. 5.1** is related to the number of free electrons, n, in a cubic metre of copper by **Equation 5.2**,

$$m = nAe \qquad \textbf{Equation 5.2}$$

where A is the cross-sectional area of the wire ($8.82 \times 10^{-7}\,m^2$) and e is the electronic charge (1.60×10^{-19} C).

(ii) Determine the number of free electrons that exist in a cubic metre of copper.

Number = _____ [2]

(iii) Determine the density of copper, in $kg\,m^{-3}$, if each atom contributes a single free electron, and 6.02×10^{23} copper atoms have a mass of 63.6 g.

Density = _____ $kg\,m^{-3}$ [3]

www.xtrapapers.com

THIS IS THE END OF THE QUESTION PAPER

www.xtrapapers.com

www.xtrapapers.com

Permission to reproduce all copyright material has been applied for.
In some cases, efforts to contact copyright holders may have been unsuccessful and CCEA will be happy to rectify any omissions of acknowledgement in future if notified.

209760

www.xtrapapers.com

Rewarding Learning

ADVANCED SUBSIDIARY (AS)
General Certificate of Education
2016

Physics

Assessment Unit AS 3

assessing

Practical Techniques
Sessions 1 and 2

[AY131] [AY132]

WEDNESDAY 11 AND THURSDAY 12 MAY

AY131 AY132

APPARATUS AND MATERIALS LIST

www.xtrapapers.com

PHYSICS UNIT 3 (AS 3)
APPARATUS AND MATERIALS REQUIRED FOR PRACTICAL ASSESSMENTS

CONFIDENTIAL

Information about the apparatus and materials required for the AS Practical Assessments **must not** be communicated to candidates sitting the examination.

This document gives preliminary information on the apparatus and materials required for the AS Practical Assessments.

Teachers will be given detailed instructions for setting up the experiment in the *Confidential Instructions for Physics (Advanced Subsidiary) Practical Tests*, to which they will have confidential access from March 2016.

Teachers will have confidential access to a copy of the experimental tests two working days (48 hours) before the start of the assessment.

The AS 3 Practical Techniques Assessment is a test of practical skills consisting of Section A and Section B. Section A is comprised of 4 short experimental tests (20 marks) and Section B consists of one question requiring the analysis of experimental results (20 marks). The duration of the assessment is 1 hour 30 minutes. Some of this time will be set aside for supervisors to re-set the apparatus ready for the next candidates. **All** candidates should attempt Section A of the AS 3 assessment first followed by Section B. Section A of the assessment should be run as a circus of experiments with candidates moving to the next experiment at the designated time. The assessment should be timed as follows:

Section A	**Time**
Q1 (Short practical test)	*13 minutes*
Changeover and practical write-up	2 minutes
Q2 (Short practical test)	*13 minutes*
Changeover and practical write-up	2 minutes
Q3 (Short practical test)	*13 minutes*
Changeover and practical write-up	2 minutes
Q4 (Short practical test)	*13 minutes*
Changeover and practical write-up	2 minutes
Section B	**Time**
Question on the analysis of experimental results	*30 minutes*

In Section A, at the end of each 13 minute period, candidates must stop using the apparatus. During each 2 minute changeover period candidates may write up anything they have not completed however they will not have access to the apparatus.

www.xtrapapers.com

The apparatus in the following list will allow for **one experiment** to be set up for each of the short practical tests which make up questions 1–4. In other words, each set of apparatus (as listed on pages 4 and 5) will accommodate four candidates when doing part A as a circus of experiments.

The apparatus can be used for alternative sessions according to the following schedule:

11 May 2016 Physics AS 3A (AY131)

(Main Session) **9.15 am–10.45 am**
(First Alternative) **11.00 am–12.30 pm**
(Second Alternative) **1.15 pm–2.45 pm**
(Third Alternative) **3.00 pm–4.30 pm**

12 May 2016 Physics AS 3B (AY132)

(Main Session) **9.15 am–10.45 am**
(First Alternative) **11.00 am–12.30 pm**
(Second Alternative) **1.15 pm–2.45 pm**
(Third Alternative) **3.00 pm–4.30 pm**

One set of apparatus for AS 3A (AY131) will therefore be sufficient for sixteen candidates on **11 May** if the Main Session and all three alternatives are used. Similarly, one set of apparatus for AS 3B (AY132) will be sufficient for sixteen candidates on **12 May** if the Main Session and all three Alternatives are used. A laboratory may contain one, two, three or more sets of apparatus. This means that four, eight, twelve or more candidates can be accommodated in the same session. **When alternative sessions are used care must be taken to segregate candidates who have taken the examination from those who have still to sit the examination.**

IMPORTANT NOTICE
Centres are urged to order items needed for the Physics Practical Tests from the suppliers as soon as possible.

www.xtrapapers.com

Apparatus and Materials List

Question 1

Ref.	Component	Session 1	Session 2
1.1	Semicircular transparent optics block	1	1
1.2	Ray box with single slit	1	1
1.3	12 V power supply unit (ac or dc)	1	1
1.4	Protractor	1	1
1.5	Rule (30 cm)	1	1

Question 2

Ref.	Component	Session 1	Session 2
2.1	100 Ω ±1%, 0.6 W metal film resistor	1	1
2.2	200 Ω ±1%, 0.6 W metal film resistor	2	1
2.3	300 Ω ±1%, 0.6 W metal film resistor	1	2
2.4	0–20 V digital voltmeter D.C. (reading to 0.01 V)	2	2
2.5	0–>12V power supply unit D.C. with switch	1	1
2.6	Ohmmeter/multimeter to read from 0 to 400 Ω	1	1
2.7	Connecting leads with 4 mm plugs at each end	7	7
2.8	Component holder	4	4
2.9	Masking tape	✓	✓
2.10	Labels	✓	✓

www.xtrapapers.com

Question 3

Ref.	Component	Session 1	Session 2
3.1	Paper clip (25 mm)	1	1
3.2	Rule (half-metre, 30 cm or 15 cm)	1	1
3.3	Micrometer screw gauge (accurate to 0.01 mm)	1	1

Question 4

Ref.	Component	Session 1	Session 2
4.1	0–10 N newton-meter in 0.1 N intervals	1	1
4.2	Wooden block (~ 300 g)	1	1
4.3	String	✓	✓
4.4	Screw eyes (~ 20 mm)	1	1
4.5	Metre rule	1	1
4.6	Electronic scales, accurate to 0.01 g reading to 2 kg	1	1
4.7	500 g slotted masses	2	2
(4.7	possible alternative 100 g slotted masses	10	10)

www.xtrapapers.com

www.xtrapapers.com

www.xtrapapers.com

www.xtrapapers.com

Rewarding Learning

ADVANCED SUBSIDIARY (AS)
General Certificate of Education
2016

Physics

Assessment Unit AS 3

assessing

Practical Techniques
Session 1 (pp 3–8) and 2 (pp 9–14)

[AY131] [AY132]

WEDNESDAY 11 AND THURSDAY 12 MAY

CONFIDENTIAL INSTRUCTIONS TO TEACHERS

www.xtrapapers.com

CONFIDENTIAL INSTRUCTIONS FOR PHYSICS (ADVANCED SUBSIDIARY) PRACTICAL TECHNIQUES

Confidentiality

To maintain the integrity of the Assessment, **no** question papers or any material pertaining to the Assessment should be publicly released until after the final session of the second day.

General

The Internal Assessment will contain five compulsory questions, of which Section A is made up of four 15-minute experimental tests and Section B is a 30-minute question testing Data Analysis. The total time allowed is 1 hour 30 minutes. The order in which candidates are to take the questions in Section A is to be decided by the Supervisor. Candidates will have access to the apparatus in each experimental task for 13 minutes each, the final two minutes being reserved for adjustment of the apparatus by the Supervisor. During this 2 minute changeover period candidates may write-up anything they have not completed; however, they will not have access to the apparatus. At the end of Section A, candidates should be directed to an area set aside for Section B which consists of one question in which a set of experimental results will be analysed.

www.xtrapapers.com

SESSION 1

Question 1

Ref.	Component	Session 1
1.1	Semicircular transparent optics block	1
1.2	Ray box with single slit	1
1.3	12 V power supply unit (a.c. or d.c.)	1
1.4	Protractor	1
1.5	Rule (30 cm)	1

Preparation

Connect the ray box to the power supply.
Check that a ray incident halfway along the long side at an angle of incidence of 30°, emerges from the straight side of the block.

Before the examination

Place the following on the bench: ray box connected to power supply, optics block, protractor and rule.

Action at changeover

Return the apparatus to the original arrangement on the bench.

Information required by examiners

None

www.xtrapapers.com

Question 2

Ref.	Component	Session 1
2.1	100 Ω ±1%, 0.6 W metal film resistor	1
2.2	200 Ω ±1%, 0.6 W metal film resistor	2
2.3	300 Ω ±1%, 0.6 W metal film resistor	1
2.4	0–20 V digital voltmeter d.c. (reading to 0.01 V)	2
2.5	0 – >12 V power supply unit d.c. with switch	1
2.6	Ohmmeter/multimeter to read from 0 to 400 Ω	1
2.7	Connecting leads with 4 mm plugs at each end	9
2.8	Component holder	4
2.9	Masking tape	✓

Preparation

Use the masking tape to conceal the markings on all the resistors.
Label the 100 Ω resistor "R_{2a}" and insert into a component holder.
Label one 200 Ω resistor "R_{2b}" and insert into a component holder.
Label the other 200 Ω resistor "R_1" and insert into a component holder.
Label the 300 Ω resistor "R_{2c}" and insert into a component holder.

Set up the circuit shown in **Fig. 2.1**.

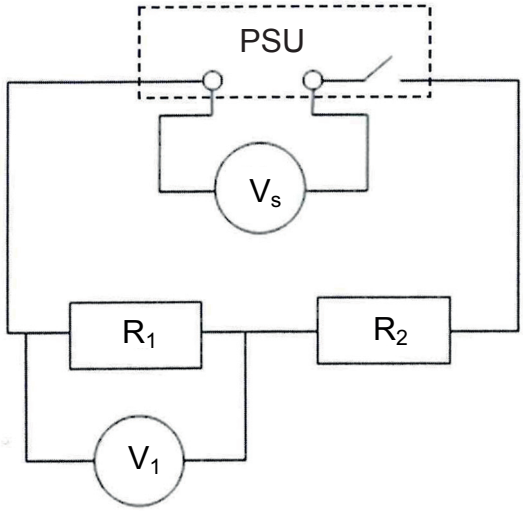

Fig. 2.1

Label the voltmeters V_s and V_1 as in **Fig. 2.1**.

www.xtrapapers.com

Label the multimeter/ohmmeter “ohmmeter” and set it to the appropriate range. Blank any unused terminals with the masking tape and tape over the range adjustment dial.

Test 1: Ensure that V_1 is approximately half V_s when resistor R_{2b} is inserted.

Before the examination

In the circuit of **Fig. 2.1** ensure the switch is in the OFF position, the adjustment dial is in the lowest position and the flying leads for R_2 are obvious. Position the flying leads on either side of a label marked R_2. Use the masking tape to make the label.

Position R_{2a}, R_{2b} and R_{2c} adjacent to the circuit.

Connect leads to the ohmmeter and leave adjacent to the R_2 resistors.

Action at changeover

Return the apparatus to the original arrangement.

Information required by examiners

None

www.xtrapapers.com

Question 3

Ref.	Component	Session 1
3.1	Paper clip (25 mm) wire 0.5 mm ⩽ diameter ⩽ 1.0 mm	1
3.2	Rule (half-metre, 30 cm or 15 cm)	1
3.3	Micrometer screw gauge (accurate to 0.01 mm)	1

Preparation

Ensure the micrometer screw gauge has no zero error.

Action at changeover

Remove the straightened paper clip and replace with a new one.

Information required by examiners

None

www.xtrapapers.com

Question 4

Ref.	Component	Session 1
4.1	0–10 N newtonmeter in 0.1 N intervals	1
4.2	Wooden block (~ 300 g)	1
4.3	String	✓
4.4	Screw eyes (~ 20 mm)	1
4.5	Metre rule	1
4.6	Electronic scales, accurate to 0.01 g reading to 2 kg	1
4.7	500 g slotted masses	2
(4.7	possible alternative 100 g slotted masses	10)

Preparation

Zero the newtonmeter (in the vertical position).

Screw the ‘screw eye’ into the centre of the smallest side of the wooden block.
Tie ~ 150 mm string to the ‘eye’.
Tie the newtonmeter to the other end of the string.

Before the examination

Ensure the candidate has a desk length of ~ 1 m.
Ensure the wooden block can accommodate all the slotted masses on its upper face.
Test: Use the newtonmeter to drag the wooden block, ensure that there is a clear difference in force required to move the block with the different masses added.
If values of force exceed 10 N, supply a smoother surface for the experiment.

Action at changeover

Return the apparatus to the original arrangement.

www.xtrapapers.com

Question 5

Apart from the provision of a suitable writing area, no apparatus is required for this Data Analysis question.

www.xtrapapers.com

SESSION 2

Question 1

Ref.	Component	Session 2
1.1	Semicircular transparent optics block	1
1.2	Ray box with single slit	1
1.3	12 V power supply unit (a.c. or d.c.)	1
1.4	Protractor	1
1.5	Rule (30 cm)	1

Preparation

Connect the ray box to the power supply.
Check that a ray incident halfway along the long side at an angle of incidence of 35°, emerges from the straight side of the block.

Before the examination

Place the following on the bench: ray box connected to power supply, optics block, protractor and rule.

Action at changeover

Return the apparatus to the original arrangement on the bench.

Information required by examiners

None

www.xtrapapers.com

Question 2

Ref.	Component	Session 2
2.1	100 Ω ±1%, 0.6 W metal film resistor	1
2.2	200 Ω ±1%, 0.6 W metal film resistor	1
2.3	300 Ω ±1%, 0.6 W metal film resistor	2
2.4	0–20 V digital voltmeter d.c. (reading to 0.01 V)	2
2.5	0 – >12 V power supply unit d.c. with switch	1
2.6	Ohmmeter/multimeter to read from 0 to 400 Ω	1
2.7	Connecting leads with 4 mm plugs at each end	9
2.8	Component holder	4
2.9	Masking tape	✓

Preparation

Use the masking tape to conceal the markings on all the resistors.
Label the 100 Ω resistor "R_{2a}" and insert into a component holder.
Label the 200 Ω resistor "R_{2b}" and insert into a component holder.
Label one 300 Ω resistor "R_{2c}" and insert into a component holder.
Label the other 300 Ω resistor "R_1" and insert into a component holder.

Set up the circuit shown in **Fig. 2.1**.

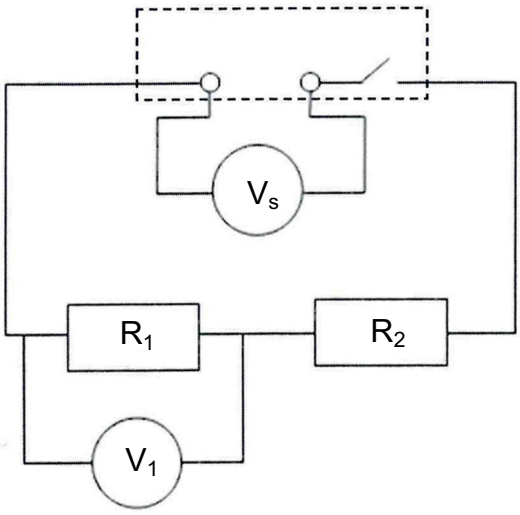

Fig. 2.1

Label the voltmeters V_s and V_1 as in **Fig. 2.1**.

www.xtrapapers.com

Label the multimeter/ohmmeter “ohmmeter” and set it to the appropriate range. Blank any unused terminals with the masking tape and tape over the range adjustment dial.

Test 1: Ensure that V_1 is approximately half V_s when resistor R_{2c} is inserted.

Before the examination

In the circuit of **Fig. 2.1** ensure the switch is in the OFF position, the adjustment dial is in the lowest position and the flying leads for R_2 are obvious. Position the flying leads on either side of a label marked R_2. Use the masking tape to make the label.

Position R_{2a}, R_{2b} and R_{2c} adjacent to the circuit.

Connect leads to the ohmmeter and leave adjacent to the R_2 resistors.

Action at changeover

Return the apparatus to the original arrangement.

Information required by examiners

None

www.xtrapapers.com

Question 3

Ref.	Component	Session 2
3.1	Paper clip (25 mm) wire 0.5 mm ⩽ diameter ⩽ 1.0 mm	1
3.2	Rule (half-metre, 30 cm or 15 cm)	1
3.3	Micrometer screw gauge (accurate to 0.01 mm)	1

Preparation

Ensure the micrometer screw gauge has no zero error.

Action at changeover

Remove the straightened paper clip and replace with a new one.

Information required by examiners

None

www.xtrapapers.com

Question 4

Ref.	Component	Session 1
4.1	0–10 N newtonmeter in 0.1 N intervals	1
4.2	Wooden block (~ 300 g)	1
4.3	String	✓
4.4	Screw eyes (~ 20 mm)	1
4.5	Metre rule	1
4.6	Electronic scales, accurate to 0.01 g reading to 2 kg	1
4.7	500 g slotted masses	2
(4.7	possible alternative 100 g slotted masses	10)

Preparation

Zero the newtonmeter (in the vertical position).

Screw the ‘screw eye’ into the centre of the smallest side of the wooden block.
Tie ~ 150 mm string to the ‘eye’.
Tie the newtonmeter to the other end of the string.

Before the examination

Ensure the candidate has a desk length of ~ 1 m.
Ensure the wooden block can accommodate all the slotted masses on its upper face.
Test: Use the newtonmeter to drag the wooden block, ensure that there is a clear difference in force required to move the block with the different masses added.
If values of force exceed 10 N, supply a smoother surface for the experiment.

Action at changeover

Return the apparatus to the original arrangement.

www.xtrapapers.com

Question 5

Apart from the provision of a suitable writing area, no apparatus is required for this Data Analysis question.

www.xtrapapers.com

www.xtrapapers.com